Hybrid Hydraulic System

"ECO RICH"

EHU SERIES
Instruction Manual

《Photo： EHU25-M07-AE-30》

・This instruction manual is based on these following types Eco Rich.
As for MGF.NO. before them, there is some difference in operating manual of the panel and adjusting method.

- ☐ EHU14-L04 -A -30 :MFG.NO. 3C-＊＊-＊＊＊＊＊
- ☐ EHU25-L04 -A -30 :MFG.NO. 3C-＊＊-＊＊＊＊＊
- ☐ EHU25-L07 -AE -30 :MFG.NO. 3D-＊＊-＊＊＊＊＊
- ☐ EHU25-M07-AE -30 :MFG.NO. 3D-＊＊-＊＊＊＊＊
- ☐ EHU30-M07-AE -30 :MFG.NO. 3D-＊＊-＊＊＊＊＊

DAIKIN INDUSTRIES, LTD.

[redacted]

Oil Hydraulics Division

《SAFETY PRECAUTIONS》

■Before Usage

- To ensure to notify these contents of this document for user.
- Add this contents to your machine's handling manual which uses this product.
- Before installation, operation or maintenance, read thoroughly this handling manual and other attached documents and learn equipments knowledge, safety information and attentions, then use this product properly.
- To ensure keeping this manual, attached documents and supply specifications and so on, whenever user enable read these documents.
- So all figure or photo in this manual are sometimes drawn the state of removing the cover or safety insulate object to explain details, which you operate surely put the cover or insulate object as it was before and operate following this manual.
- This manual may be changed for improvement of the product or alteration of specifications or improve this manual more easily.
- This document is about safety handling of our hydraulic unit. Prepare date for safety handling according to the standard for safety operation or maintenance of your machine.

■Symbols of safety precautions in this manual

- In this manual, safety precautions are represented and classify 3 rank, " ⚠ Danger", " ⚠ Warning" and " ⚠ Caution".

⚠ Danger: If you ignore this symbol and handle improperly, it may pose a high risk of causing death or serious injury.

⚠ Warning: If you ignore this symbol and handle improperly, it may pose the risk of causing death or serious injury.

⚠ Caution: If you ignore this symbol and handle improperly, it may pose the potential risk of causing injury or damage to the product or property.

Although the matter is mentioned in " ⚠ Caution" symbol, there will cause serious result.
Be sure to observe these precautions.

■Safety

◆ General

⚠ Danger
• Qualified people perform the task such as transportation, installation, piping, wiring, operation, handling, maintenance, and inspection. • When working, make use of protective tools (uniform, safety belt, helmet, safety shoes, gloves, etc). • Do not use another specifications which is mentioned in the catalog, or delivery specifications.

⚠ Caution
・Be sure to enforce daily inspection (it is mentioned in this document, or in attached document.) ・Do not stand, beat or add pressure on the products, or you may be injured and the product is damaged.

《Exemption Clause》

- Damages owing to earthquake, fire, and action of the third party, other accidents, intentional or negligence, misuse of customers, use under unusual conditions we would exempt from any responsibilities.
- Incidental damages (loss of business profit, business suspension) owing to usage of this product, or impossibility of usage, we would exempt from any responsibilities.
- Accidents and damages caused by disobeying manuals or supply specifications, we would exempt from any responsibilities.
- Damages caused by wrong working owing to combination of connecting equipment, we would exempt from any responsibilities.

《Limitation of uses》

- Make sure to consider the situation, in case of life threatening owing to breakdown or wrong working of this machine, or possibilities of danger to the human body.
- Though, this product manufactured under strict quality control, in case of using important equipment, to prevent serious accident or damage from failure of this machine, install safety equipment.

《Additional function along with the software change》

- Since these parts may be changed in the quality, performance improvement or other circumstances, the contents of this manual are sometimes partly different from the product. Please understand it.
- It is able to confirmed about the function of Eco Rich in use by the unit name plate.
  Refer to the table that is attached to the end of this document for corresponding function.

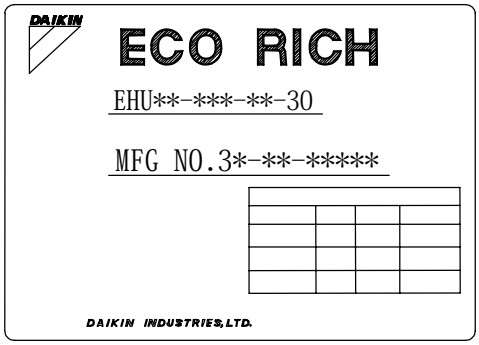

《 unit name plate 》

ー Table of contents ー

【1.Preface】

Thank you for choosing the “Eco Rich” series of DAIKIN hybrid hydraulic system.
DAIKIN hybrid hydraulic system, “Eco Rich” realized overwhelming energy-saving and low noise by adopting hydraulic technology and motor-inverter technology, and they are gentle hydraulic system for men and environment.

When using “Eco Rich: EHU series”, manage proper handling and maintenance after reading this manual thoroughly to cross for a long time and to keep good performance.

Approve it in case the contents of this manual are sometimes partly different from the product because of the change of the parts according to the improvement of quality, performance and other circumstances.

【2.Nomenclature】

(a)	(b)		(c)	(d)		(e)	(f)		(g)		(h)		(i)
EHU	※※	—	※	※※	—	※	※	—	30	—	※	—	※※※※

	(j)	(k)		(l)
MFG.NO.	3	※	—	※※—※※※※※

(a) Series name
- EHU: EHU Series

(b) Max.discharge flow rate of the pump
- 14: 14 L/min.
- 25: 25 L/min.
- 30: 28.5 L/min.

(c) Output characteristics
(right figure reference)
- L
- M

(d) Max. working pressure
- 04: 4.0MPa
- 07: 7.0MPa

(e) Control method
- A: pressure compensate

(f) Controller specification
- E : with reactor
- Nothing : without reactor

(g) Design NO.
- Progress according to the product has been changed.

(h) Option NO.
- Nothing: With fixed relief valve
- V : With Variable relief valve

(i) Non-standard NO.
No symbol: Standard model

(j) Design NO.
- 3: 30 design

(k) Progress NO. of design change
- 0～9、A～Z such as progress

(l) Administration of manufacture NO.
- Administration NO. of our factory

《 Output characteristics 》

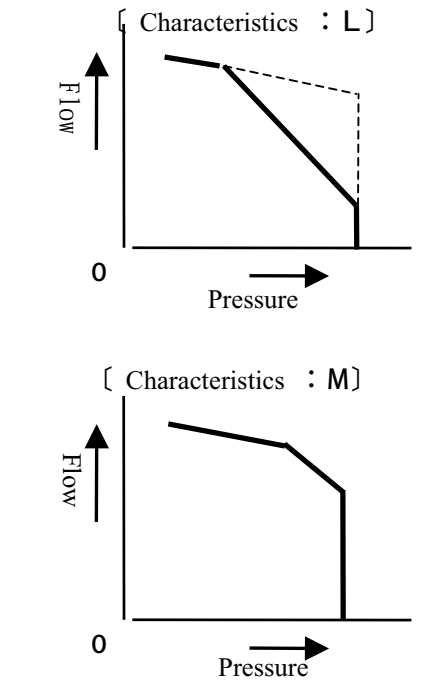

【3.Product specifications】

■Specifications

		EHU14－L04－A－30	EHU25－L04－A－30	EHU25－L07－AE－30	EHU25－M07－AE－30	EHU30－M07－AE－30
Tank capacity (L)		１０				
Motor capacity for the pump		0.75 kW nearly	1.5 kW nearly	2.2 kW nearly	2.8 kW nearly	2.8 kW nearly
Max. working pressure (Note 1) (MPa)		４.０		７.０		６.０
Discharge flow adjusting range (Note 2) (L/min)		４ ～ １４	５ ～ ２５	５ ～ ２５		５～２８．５
Weight (without hydraulic oil) (N)		４３０		４５０	４６０	４６０
Capacity for fan motor of the oil cooler		16/15W (50/60Hz)				
Power source	Motor of the pump	3φ 200/200/220 V、50/60/60 Hz				
	Fun motor of the oil cooler	2φ 200/200/220 V、50/60/60 Hz（Supply from controller）				
Relay for alarm output (Note 3)		DC １２／２４Ｖ 、 AC １００Ｖ（５０／６０ Hz）、Max.１Ａ				
Control stop signal		No-function		DC 24V (Rate 5mA)		
Standard painting		Black				

（Note 1）：PC setup pressure is set up in the Max. working pressure at shipping. (standard products).
When it is used continually Max. working pressure, use it less than of flow 5.0 L/min.
When there is the possibility to change PC pressure, use the equipment which has option NO. ”V”.
The change of the PC pressure becomes easy (the setup pressure is 1.5 MPa at shipping).

（Note 2）：It is preset to be Max. flow at shipping.
（Max. flow is theoretical value, and it is not by the guarantee value.）

（Note 3）：Refer to the table of 20-page b) Setup mode ,and that’s column of the initial setup value, for a setup of alarm at shipping.

（Note 4）：For factory-set alarm conditions, refer to “Initial setup value” in the table of b) Setup mode on page 20.

◎As for other specifications, confirm a delivery specifications. (form drawings)

■Working condition

Hydraulic oil	Petroleum series of specific hydraulic oil / anti-wear hydraulic oil
	（Refer to our [General Sample of Hydraulic Machinery (HK196A)] to see the recommended brands.）
	・Viscosity grade ： ISO VG 32~68
	・Viscosity rangade ： 15 ~ 400 mm ²/s
	・Contamination level ：within NASclass １０
Oil temperature	０ ～ ６０ ℃ （recommended working temperature range： 15~50 ℃） (note 2)
Environment temperature	０ ～ ３５ ℃
Humidity	Below 85%RH
Height above the sea level	4,000 m or less
Installation place	Indoor （must be fixed by screws）
Others	・be sure to install no-fuse-breaker and circuit breaker. ・The electric wire connecting is wired to satisfy an European standard EN60204-1.
	・Do not turn ON/OFF the power frequently, it may cause remarkable short life of the controller. Use the stop control function, in case of using this condition in the frequency. ・As for EHU**-L04 does not equipped with the control stop function in standard. Please consult us if necessary.
	・Ground (earth) terminal must be down to ground.

Note 1) Do not use any hydraulic fluid other than mineral type (hydrous or synthetic) hydraulic oil (like water-glycol).

Note 2) In case of using except recommended working temperature range, it may cause large pulsatory motion of pressure or reduce discharge volume , but it is not abnormal.

【4.Precaution of Use】

(1) For piping of this unit, use a hose so as not to convey vibration from the motor pump to the machine.

(2) To cool hydraulic oil and the motor, this hydraulic unit is equipped with an AC fan.
To ensure air intake and exhaust for the fan, do not place any obstacle within 10 cm from the end surface of the unit.

(3) If the load volume is increased, this hydraulic unit may generate counter-electromotive force during switching operation (regenerative operation), causing motor overload. When the load volume exceeds 3/8B x 20 m, provide an inline check valve for the P port.

(4) This hydraulic unit is equipped with a safety valve.
Before shipment, this safety valve has been set at a specified pressure. However, the pressure setting of the relief valve may decrease during long-term repeated operation of the machine, or due to contaminant in hydraulic unit.
If the hydraulic unit is continuously operated with the relief valve activated, it may result in an alarm condition (due to temperature rise error, etc.).
In this case, re-adjust the pressure setting of the relief valve according to [Attachment A: 2. The PC pressure changing procedure for the variable relief valve] on page 5 of the Attachment. To protect an actuator and pressure gauge of the main machine or other peripheral equipment against surge pressure, set the relief valve pressure at “PC set pressure + 0.5 MPa”.

【5. Parts name】

(The arrangement of the standard port is shown. Refer to the form drawing and the delivery specifications for the non-standard products.)

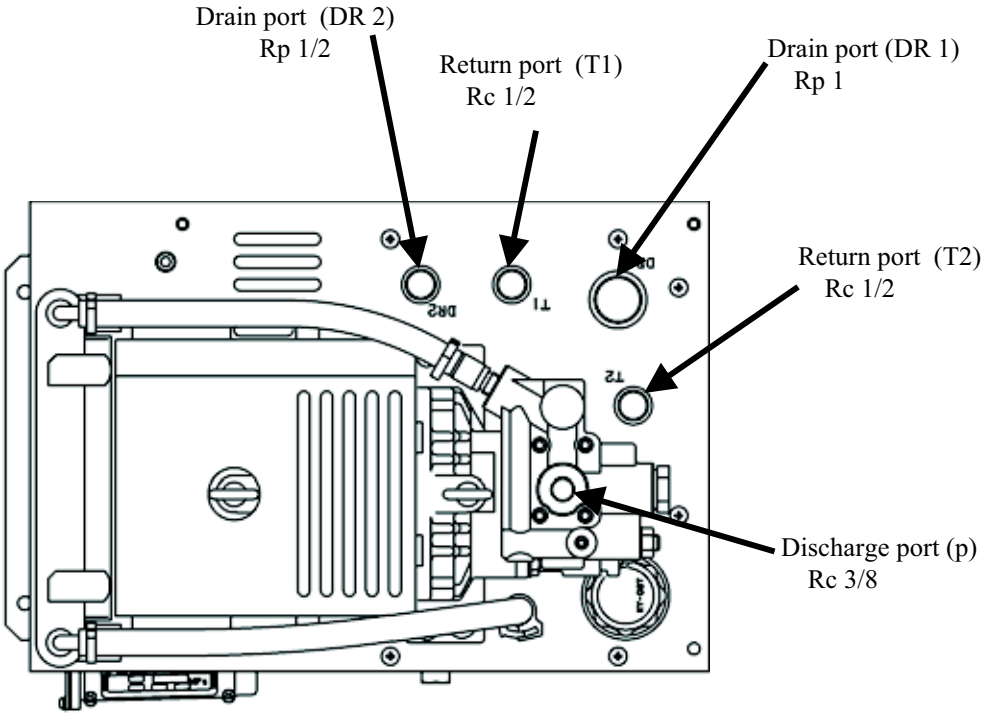

Top view of the unit

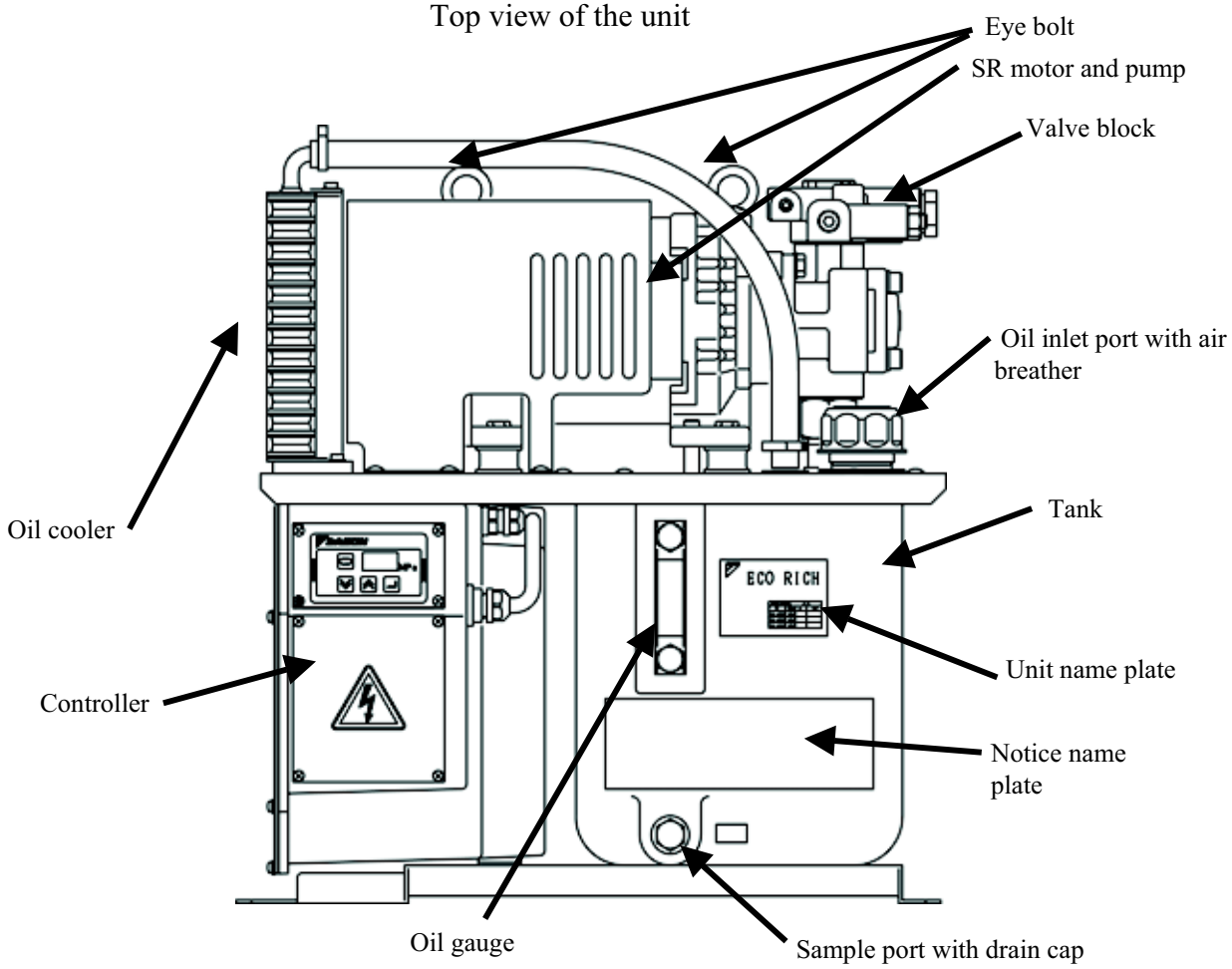

Front view of the unit

【6. Hydraulic circuit】

■Hydraulic circuit

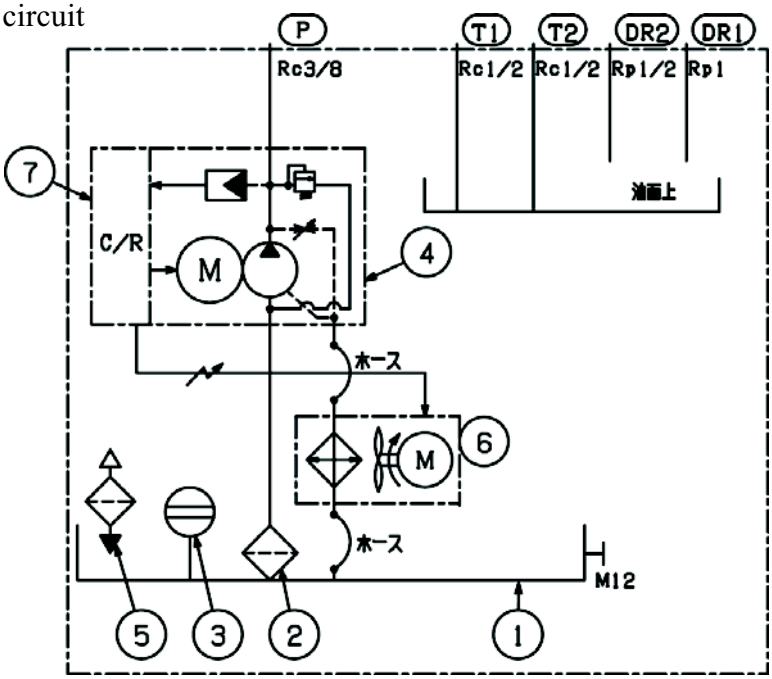

■Parts

Part NO.	Name
1	Tank
2	Suction filter
3	Oil gauge
4	Inverter driving pump
5	Oil inlet port with air breather
6	Oil cooler
7	Controller

■Piping

・Since this hydraulic unit is provided with two return ports (inside oil), two drain ports (upper oil surface) and one discharge port, piping them if necessary.
All the piping port is capped with taper cap (vinyl cap).
Bind the piping with seal tape.

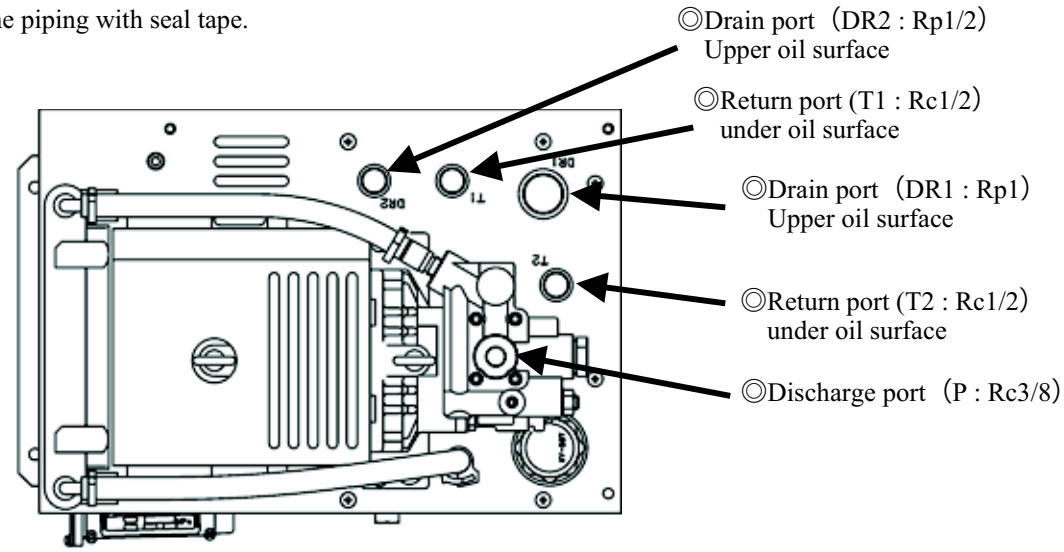

【7.Points for transporting, moving and installing】

・Though the vibration absorbed rubber is attached to the leg of the motor pump because of the low vibration and low noise. It is fixed with a hexagon socket bolt (2 of M6 x L35) as to protect the vibration absorbed rubber from transport vibration countermeasure at shipping.

■Operation

・Before operation, remove the hexagon socket bolt (2 of M6 x L35).
If it is operated without removing these bolts, it may cause loud vibration and noise.

■Transporting

・When it is being transported, install the spacer which protect the vibration absorbed rubber with hexagon socket bolt (2 of M6 x L35), and fix the motor pump and the tank upper board securely. (Refer to the below figure.)
Be sure to suspend it with eyebolt.
In this time, move the unit carefully about balance so as not to be damaged the piping by the hook.

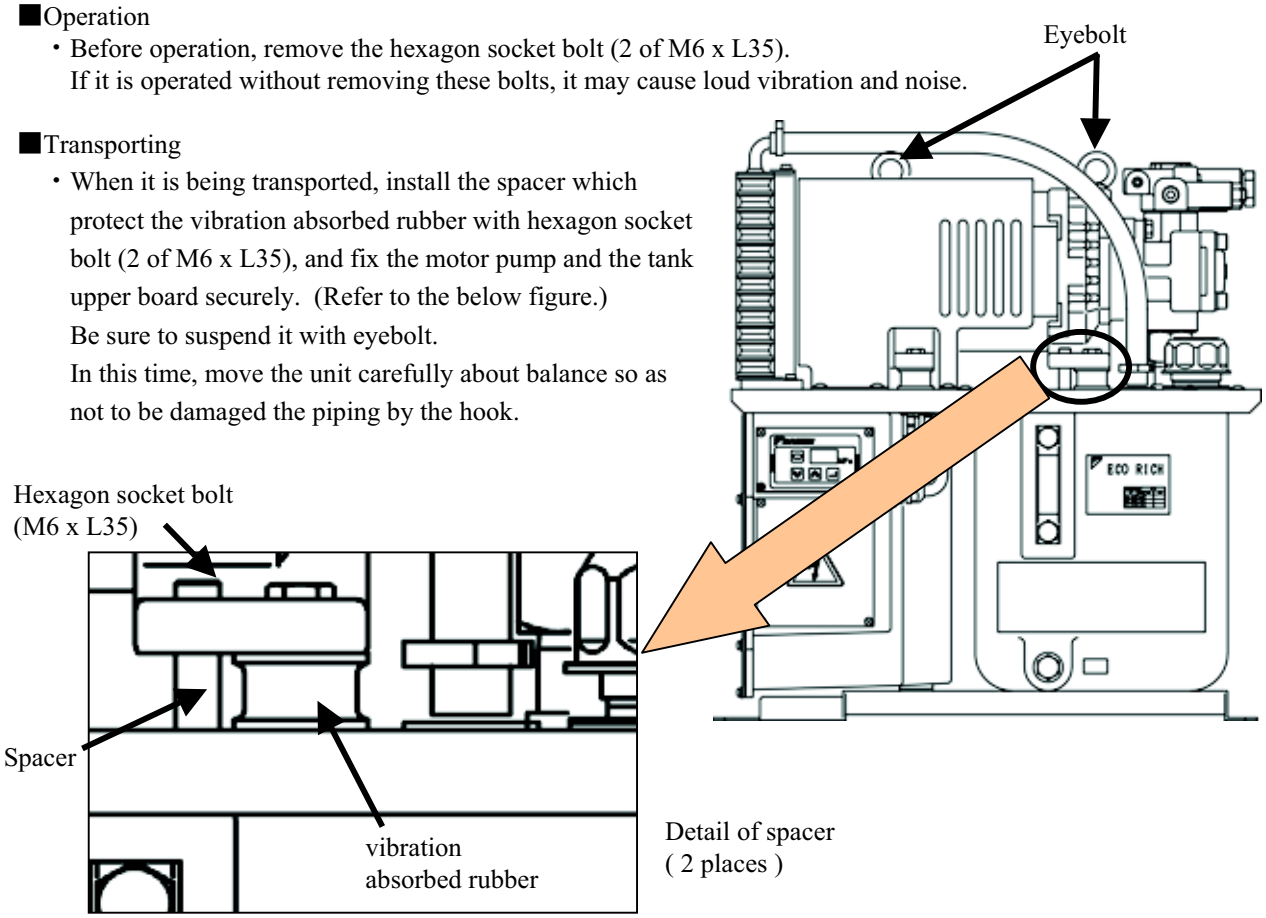

Weight table (hydraulic oil in not included)

Type	EHU14-L04	EHU25-L04	EHU25-L07	EHU25-M07	EHU30-M07
Weight	43kg		45kg	46kg	

⚠ Danger

・If the vibration absorbing rubber is suspended without spacer for its protection, it is dangerous that the vibration absorbing rubber may break off and fall.
・In case that it is suspended except for the eyebolt (pump piping), it is dangerous to fall and turnover.
・Confirm the weight of the hydraulic unit, and suspend it within the rated load of the hanger-hook.

⚠ Warning

・Never approach during carry by hanger-hook. There is danger of injury due to fall and turnover.

⚠ Caution

・Do not move the tank with filling oil. (The oil leaking and air-mixing will cause inferior operation.)
・During transportation, be sure to fix it so that it may not be moved by vibration and another force.

■Points for installation

◆Securing of space of inhalation/exhaust

Do not put the obstacle that disturbs inhalation/exhaust of the oil cooler within 10cm from the end of the unit. Moreover, install it in the good ventilation so that the unit may not be filled with heat, and be careful that temperature of inhalation becomes fixed surrounding temperature (less than 35℃).

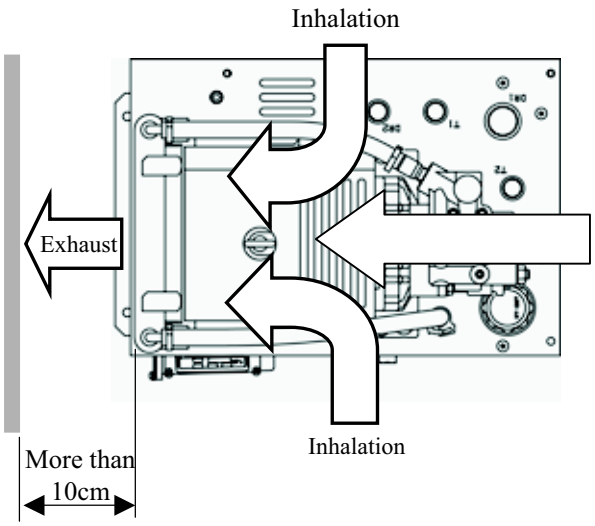

⚠ Warning
・When it is used in where there is no space of inhalation/exhaust, and heat place, the heat exchange function of the oil cooler/fan motor declines, and finally, oil temperature and temperature of the hydraulic equipment becomes unusual high temperature. ・In case of touching high temperature part, you may be burnt.

⚠ Caution
・When it is used in where there is no space of inhalation/exhaust, and heat place, the motor becomes high temperature, and the life of the motor will be shortened apparently. ・When the motor becomes high temperature, temperature protection suspends its operation. (In case “P02: temperature alarm output setting” is “1”(as output), alarm signal are outputted.) ・If using under high temperature condition continuously, it causes troubles and shorten the life of the hydraulic equipment such as the motor pump. ・If using under high temperature condition continuously, it makes the quality of the hydraulic oil lower, and shorten it’s life.

◆ Installation on horizontal place

・Install the hydraulic unit on the horizontal table or the horizontal floor.

Fix the hydraulic unit with bolts (4 of M8) not to move.

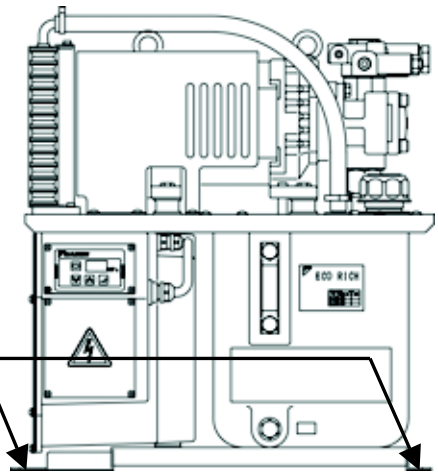

Unit mounting hole ϕ 9 (4 positions)
(Please prepare for fixing bolt separately by customer side.)

⚠ Warning
・If the hydraulic unit is not fixed with bolt, it is dangerous because of falling down and moving around by the hydraulic reactive force in the pipes, so the unit must be fixed.

⚠ Caution
・In case it is installed in the slope, there will be oil-leaking and air-mixing cause unusual noise and shorten equipment’s life.

【8.Preparation for operation】

■Filling hydraulic oil

・Remove the oil inlet port with air breather to turn counterclockwise, and put pure hydraulic oil (within NAS 10 class) in the tank.

The oil volume should be kept that the float of the oil gauge is between the red line and the yellow line.

Use the hydraulic oil appropriate to the specifications as it was mentioned in page 6.

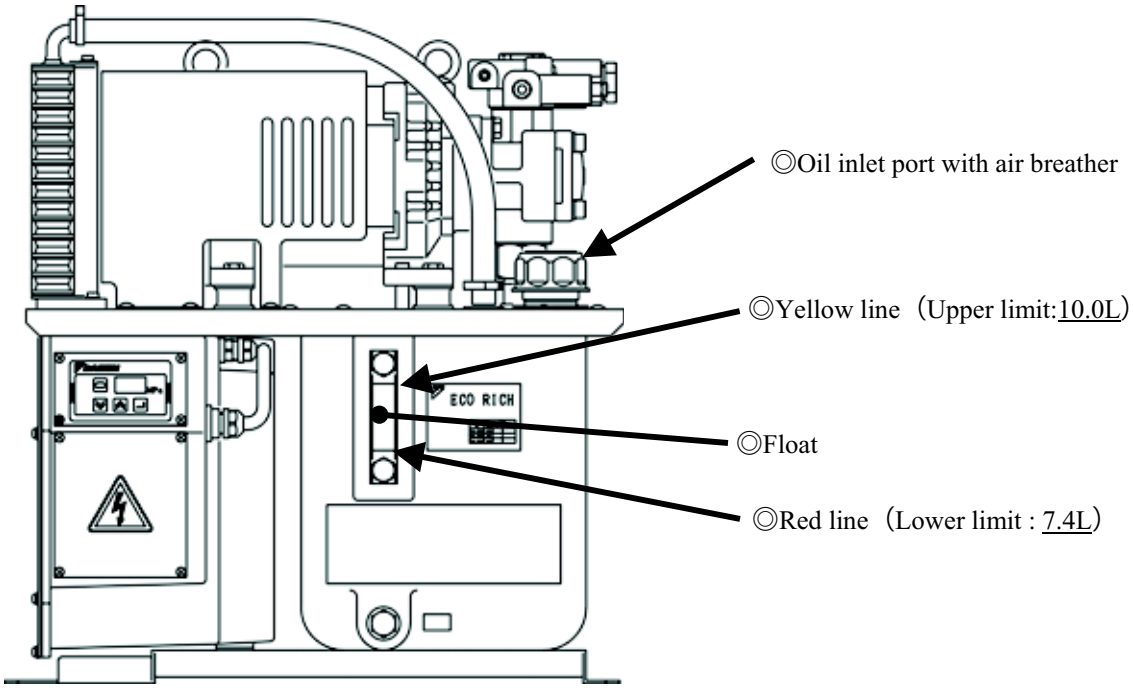

⚠ Caution
・ If it operates without putting oil in the tank, burnt and abrasion occur in the pump body, and it may be damaged. ・Since oil is supplied to the hydraulic circuit on the machine at the initial operation of the machine, be careful of the oil decrease inside the tank. ・The oil level inside the tank will vary a lot with the different hydraulic circuit on the machine, be careful that if the oil is overflowed from the tank or the oil level is lower than its usual level.

■ Electric wiring

Be sure to carry out electric wiring in accordance with the terminal wiring diagram (below figure).

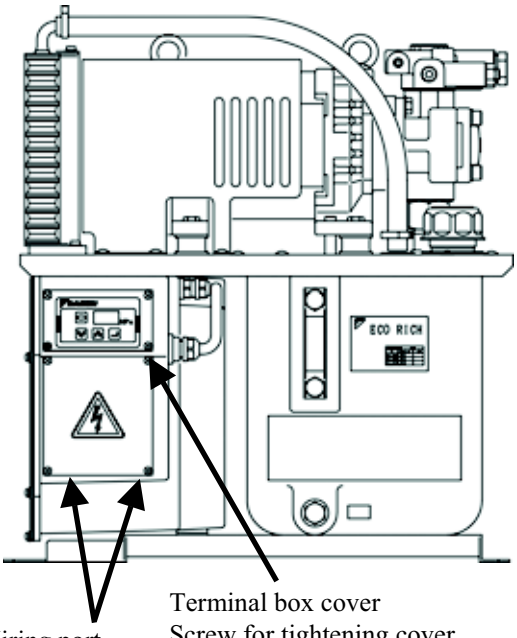

Wiring port

Terminal box cover
Screw for tightening cover
(M4 Cross-Recessed Screw x4)
[Tighten torque : 1.0N・m]

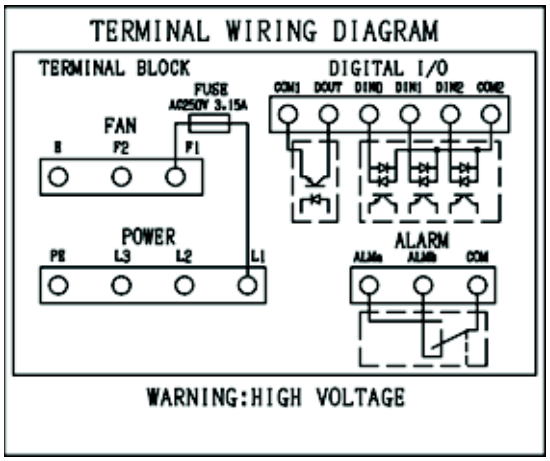

Wiring diagram (EHU25-M(L)07)

※ This diagram shows power OFF condition (alarm condition).
[COM－ALMa] Normal: closed Abnormal: opened
[COM－ALMb] Normal: opened Abnormal: closed

As for EHU**-L04 does not equipped with DIGITAL I/O terminal.
Please consult us if necessary.

⚠ Danger

- To protect the electric circuit and prevent electric shock, install the safety device such as a no fuse breaker or a ground-fault interrupter on the main power source of the hydraulic unit so as to be based on the European standard (EN60204-1).
(Refer to below table for the capacity of each machine)
- In order to release the leakage from inverter circuit, ground (earth) terminal must be down to ground over the third class. (Connect it directly not to pass through the breaker) The ground terminal is connected to the motor frame. Ensure **Class D (former Class 3) or higher** grounding condition.
- Wire after installing the machine surely.
- Be sure to turn off the breaker of the main power source and confirm that the power source was interrupted before the wiring,
- Do not connect the supply line to the input and output terminal.
- Never add the excessive power voltage beyond its specifications of the hydraulic unit

⚠ Caution

- Since this hydraulic unit has protect-over current function built in, thermal for protect-over current function is not necessary.
- In case of using thermal, it may work wrong way by the inverter switching.

[Rated current in type]

		EHU14-L04	EHU25-L04	EHU25-L07	EHU25-M07	EHU30-M07
Rated current	3φ200V 50Hz	7．3A	7．9A	5．7A	9．1A	9．6A
	3φ200V 60Hz	7．3A	7．9A	5．7A	9．1A	9．6A
	3φ220V 60Hz	7．0A	7．5A	5．3A	8．5A	8．7A
No fuse breaker Setup value		15A	15A	15A	15A	15A

◆Wiring point

When wiring the main power source and the alarm output signal wire, the cover of the terminal box has to be removed.

《Removing the cover of the terminal box by loosening the cross recessed screw (M4) that installed on the cover.》

● The wiring of the main power source

(1) Wire the electric cable through the wiring port of the terminal box. Use the wire and the cable clamp to be suitable for the wiring port that satisfies protection grade over IP54.
[Recommended cable clamp : Laap Co.,Ltd. made ST16]
[screw size : PG16]
* For wiring of the power supply, use a 245 IEC/H05RR-F cable.

(2) Connect the earth line to the earth terminal of the terminal stand for power source.

(3) Connect power source line to terminal stand (L1,L2,L3) of the power source. (There is not polarity.)

Refer to the below figure to connect with the terminal board.

(4) After wiring, be sure to install the cover of the terminal box as it was.

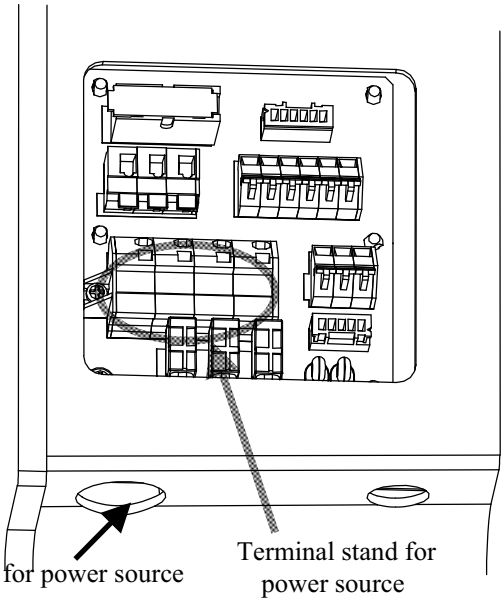

Refer to page 12, ”wiring diagram” as for the arrangement of the terminal board.

⚠ Danger

- Use alternating current (AC) which is suitable for the power source specifications of the product.
- Use the electric wire which is suitable for AWG14 (2sq~2.5sq).
- Do not connect the power source wire (L1,L2,L3) to earth connection point of power source terminal.
- The earth connection point is connected with the motor frame, and ground the earth over the third class ground.
- Be careful not to damage the conductor when stripping electric wire.
- Be careful not to stick out the conductor of wiring from the terminal stand.

⚠ Caution

- In case of preventing end of the wire from separating, treat its end with solder or use the below mentioned crimping terminal with insulated sleeve. (Refer to maker’s catalogue “WAGO made” for handling them.)
  For 2 sq: 216-205 yellow
  For 2.5 sq: 216-206 blue
  Press tool: 206-204 Bio- crimp
  Special driver: WAGO made 210-257 or 210-350/01 etc.
  (Terminal stand: WAGO made 745series)

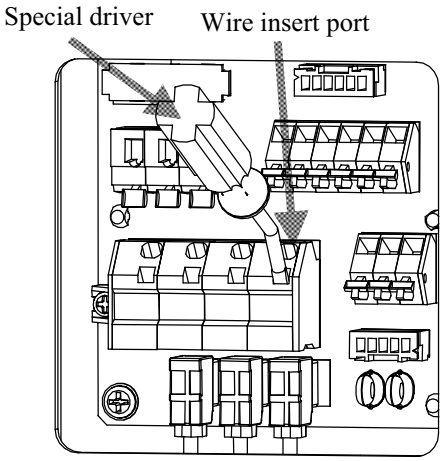

How to connect the power source wire to the terminal stand board.

① Insert special driver or precision driver (width 2.4~3mm) as left figure.
② Make sure of stripped wire length, and insert them until the end without separating.
③ Pull special driver out.
④ Make sure of wiring by pulling the electric wire slightly.

Stripped wire length: 9mm

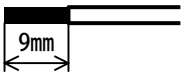

●The wiring of alarm signal line-----It is able to transmit the signal of the abnormal condition and operation of the pressure switch that is outputted from this hydraulic unit.
(The hydraulic unit can be operated without wiring.)

(1) Wire the electric cable through the wiring port of the terminal box. Use the wire and the cable clamp to be suitable for the wiring port.
[Recommended cable clamp : Laap Co.,Ltd.made ST9]
[screw size : PG9]

(2) Confirm the terminal wiring diagram on the cover of the terminal box, connect to the alarm signal connection on the terminal stand for power source.
*This diagram shows power OFF condition.
(alarm condition)

[COM－ALMa] Normal: closed Abnormal: opened
[COM－ALMb] Normal: opened Abnormal: closed

(3) After wiring, be sure to install the cover of the terminal box as it was.

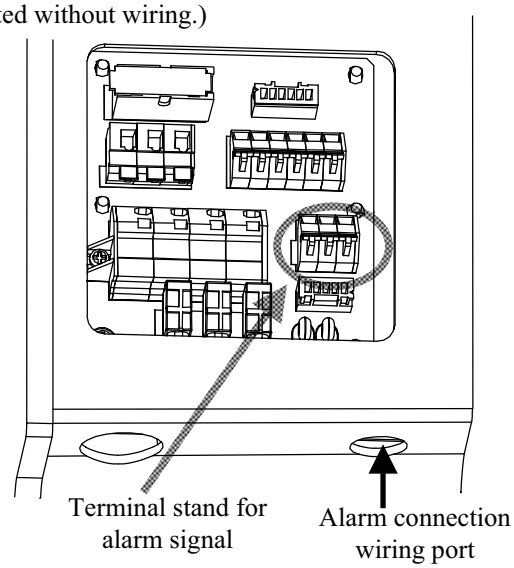

Refer to page 12, ”wiring diagram” as for the arrangement of the terminal board.

⚠ Danger

- Use the electric wire, cab tyre cable with shield which is suitable for AWG22 (0.3sq).
- Be sure to treat the end of shield cable properly, and ground the one side.
- Do not connect the alarm connect line to the terminal stand for power source.
- Be careful not to damage the conductor when stripping electric wire.
- Use DC24V or DC12V (minimum load-current 10mA) for alarm connection circuit.
  Use AC100V (50/60Hz) under alternative current control.
  (As for AC200V, it is not able to use in specification of voltage-resistance and insulation distance.)
- Use it under the maximum load-current less than 1A (load resistance).
- Be careful not to stick out the conductor of wiring from the terminal stand.

⚠ Caution

- As for alarm output signal connect “ALMa” and “COM” of wiring diagram at normal operation.
- In case of preventing end of the wire from separating, treat its end with solder or use the below mentioned crimping terminal with insulated sleeve. (Refer to maker’s catalogue “WAGO made” for handling them.)
  For AWG22 0.3 sq: 216-322 light green
  For AWG20 0.5 sq: 216-221 white
  Press tool: 206-204 Bio- crimp (same as for power source)
- Wiring port is common with control signal. (Terminal stand: WAGO made 256 series)

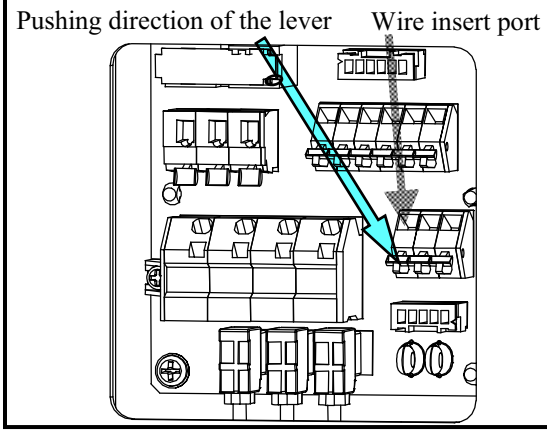

How to connect to the terminal stand board

① Push the lever with a driver etc.
② Make sure of stripped wire length, and insert them until the end without separating.
③ Remove the driver from the lever.
④ Make sure of wiring by pulling the electric wire slightly.

Stripped wire length:6mm

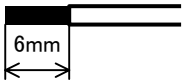

●The wiring of control stop signal line-----It is possible to operate/stop unit by ordering contact input.
(The hydraulic unit can be operated without wiring.)

●The wiring of operation ready output signal-----It is possible to output operation condition after power on.
After this signal is outputted, start to operate the actuator and so on.
(In case without wiring, refer to "Power supply turning on, a time chart related to alarm" of attached document B for the time of starting operation of the actuator and so on.)

(1) Wire the electric cable through the wiring port of the terminal box.
Use the wire and the cable clamp to be suitable for the wiring port.
(2) Confirm the terminal wiring diagram on the cover of the terminal box, connect to the control stop signal connection on the terminal stand for power source.
Refer to below figure to connect control suspend signal line to terminal base.
(3) After wiring, be sure to install the cover of the terminal box as it was.
(Wiring port is common with alarm signal.)

Refer to page 13, "wiring diagram" as for the arrangement of the terminal board.

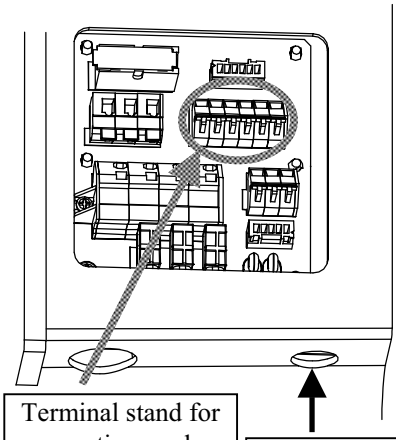

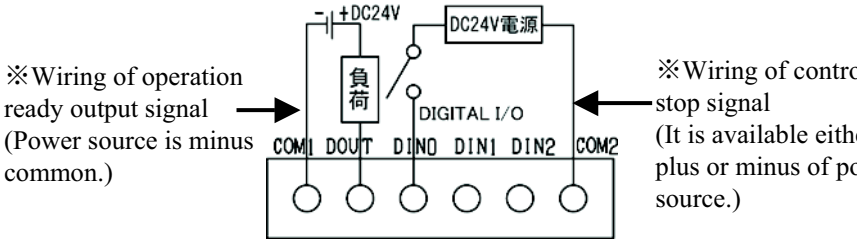

Wiring diagram of operation ready output signal and control stop signal

※Never connect except between DIN1 and DIN2 terminal.

⚠ Danger

- Use the electric wire, cabtyre cable with shield which is suitable for AWG22 (0.3sq).
- Be sure to treat the end of shield cable properly, and ground the one side.
- Do not connect control connect line to the terminal stand for power source.
- Be careful not to damage the conductor when stripping electric wire.
- Use DC24V for control stop signal.
- Be careful not to stick out the conductor of wiring from the terminal stand.

⚠ Caution

- The control stop function is difference in signal input condition (operate/stop) by setting. (Refer to setting mode of "Operating manual of the control panel".)
- At shipping (standard product), when it operates outside switch is "OFF (opened)", and it stop "ON (closed)".
- The control stop function is standard function for EHU25-L07, EHU25-M07 and EHU30-M07.
- In case of not connecting well with separating the wire's end, treat its end with solder.
- Wiring port is common with alarm signal. (Terminal stand: WAGO made 234 series)
- When wiring, if the lever is not pushed straight, the terminal stand may be damaged.

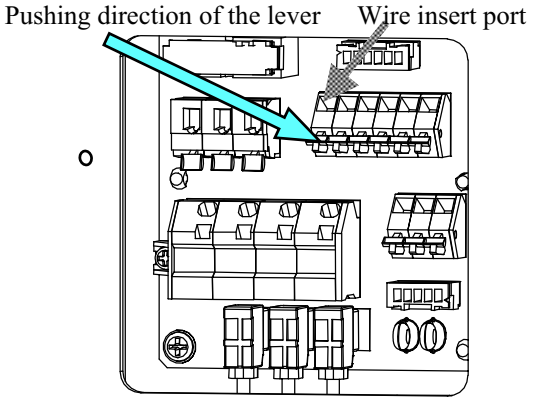

How to connect to the terminal stand board

① Push the lever with a driver etc.
② Make sure of stripped wire length, and insert them until the end without separating.
③ Remove the driver from the lever.
④ Make sure of wiring by pulling the electric wire slightly.

Stripped wire length:6mm

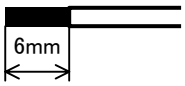

【9.Test run】

After completing pouring fixed amount of hydraulic oil into tank, piping, and wiring, perform test run.

Starting confirmation

・Turn the switch of machine controller "ON".
①Before power on, confirm wiring of earth properly.
②It is not abnormal though it may take 12~13 seconds until pressure rises after power on.
(Refer to Att.11page: 1-1,1-2)
③Confirm the pump rotation sound and pressure rising.
④Confirm that the fan of oil cooler is rotating.

Flushing operation

・After confirmation of the start, perform flushing operation under the circuit pressure at low pressure. As flushing operation, connect all piping with loop style except the actuator, and operate through 10μm filter by the oil tank of the return piping.

Changing oil

・After completing the flushing operation, remove hydraulic oil in the tank completely out of drain plug. Then fill fixed amount of flesh hydraulic oil to the oil inlet port with air breather.
(Within NAS 10 class pure oil is used as flesh hydraulic oil.)

Removing air

・Remove the air of hydraulic circuit completely.
If the air has not been removed thoroughly,
① abnormal operation of actuator, such as cylinder
② abnormal noise in the pump or in the valve
may occur.

⚠ Danger
・In the process of air removing, be careful because there is a case of high pressure or high temperature oil spouts.

【10. Operation manual of the control panel】

Since this hydraulic unit has CPU, it is easy to monitor, setup, and adjust such as pressure/flow by operation of key switch.

■ General description

The control panel is composed of 3 digits LED 8.8.8. , mode key , setting key , and ENT (enter) key . It normally indicates the actual pressure, and possible to change each mode as monitor indication and setting indication by key switching.

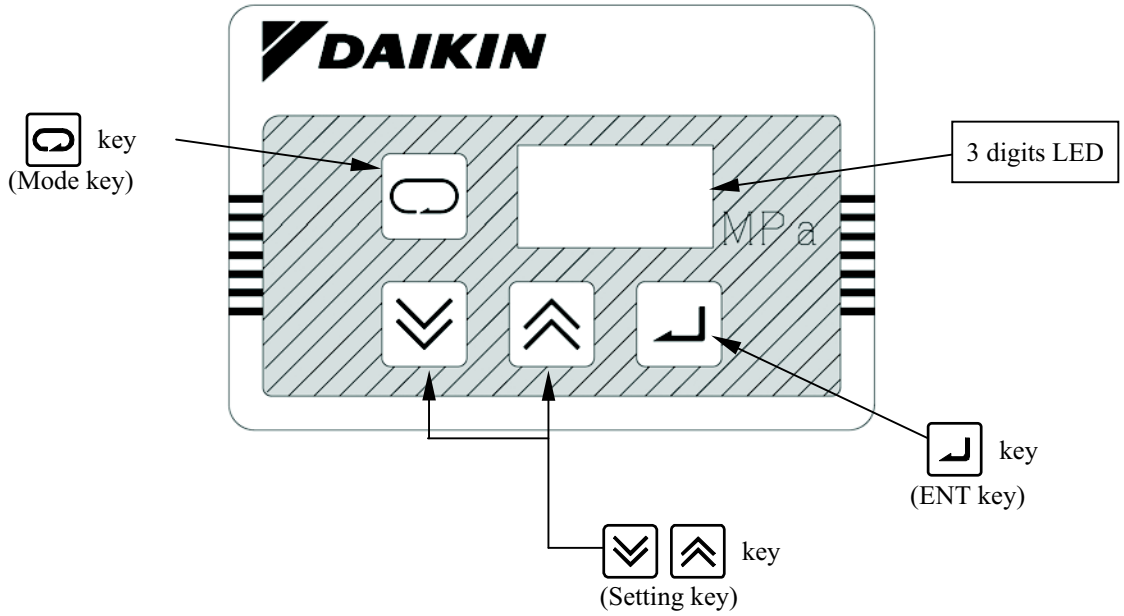

■Explanation of each mode

- Normal mode : indicate actual pressure and alarm code
- Monitor mode : indicate pressure switch setup value, max. pressure setup value, max. flow setup value, actual flow, actual number of revolutions.
- Setup mode : change the setting of max. pressure or max. flow.
- Alarm mode : confirm alarm contents.

■ Shift to each mode

The key switch operation of shift to each mode is as following figure.

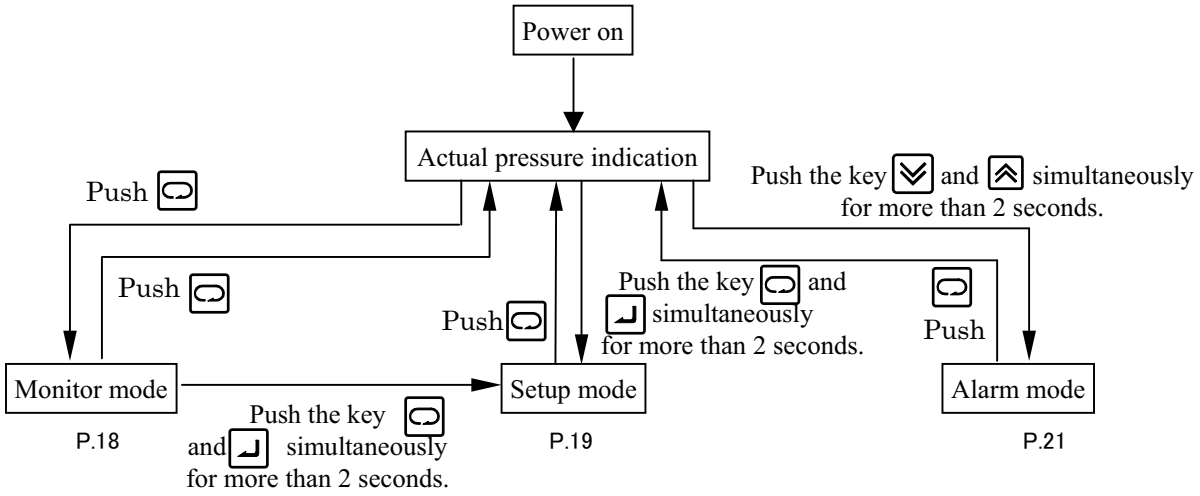

■ Operation manual of each mode

a) Monitor mode

While monitor mode, it is possible to monitor item on the table below by choice.

Item	Contents	Indication unit
n00	Pressure switch setup value	[MPa] or [×10PSI]
n01(1)	Max. pressure setup value	[MPa] or [×10PSI]
n02	Max. flow setup value	×L/min
n03	Discharge volume	×L/min
n04(2)	Latest alarm code	Refer to page22
n05	Revolutions / minute	×10min^{-1}
n06	Motor Thermistor Temp.	℃

It is able to change unit by setup mode [P08].

Operation example is shown as following.

<Ex.> Monitor actual flow rate.

Operation	Key operation	3 digit LED	Remarks
Power On			
Actual pressure indication		3.4	
Monitor mode			
Choosing item NO.	or	n00 / n03	
Monitor indication		5.0	Discharge volume (theoretical value) 5L/min
Another monitoring			
Return to actual pressure indication		3.4	

Notes

(1) As for the setup in factory, standard is MPa indication. Make sure to treat such as indication sticker to identify PSI setup, in case of changing PSI mode.
If using the machine without any indication sticker in Japan, would be punished by the measuring law.
Please arrange indication sticker in your company.

(2)Refer to the alarm indication item, for the contents of alarm code.
It is possible to confirm actual number of power source input by pushing key ↵ while alarm code indicating.

b) Setup mode

While setup mode, it is possible to setup or change of pressure/flow by operation panel. Concerning initial setting-value or adjustment range of non-standard or special required type product, refer to the delivery specifications.

Item No.	Contents	Type	Initial setup value	Adjustable range	Indication unit	Remarks
P00	Max. pressure setup	EHU14-L04	4.0	1.5～4.2	(MPa)	When ther is the possibility to change max.pressure setup value, use the equipment which has option No. "-V". Moreover, in case it has max, pressure setup value changed with standard products, it is necessary to exchange and adjust the valve block of the pump upper side.
		EHU25-L04				
		EHU25-L07	7.0	1.5～7.2		
		EHU25-M07				
		EHU30-M07	6.0	1.5～6.2		
		EHU14-L04	58	21～60	(×10PSI)	
		EHU25-L04				
		EHU25-L07	101	21～104		
		EHU25-M07				
		EHU30-M07	87	21～89		
P01	Max. flow setup	EHU14-L04	15.2	2.4～16.0	(L/min)	In case it is not able to setup the value as demand, setup the closest value as demand. Indication value is a theoretical value, not guaranteed value.
		EHU25-L04	25.0	3.4～26.2		
		EHU25-L07				
		EHU25-M07				
		EHU30-M07				
P02	Temperature alarm setup	All models	1	0: No output 1: Output	-	It is possible to indicate and setup the contact output of abnormal motor temperature rise [E41] and abnormal fin temperature rise [E43].
P03	Setup of pressure alarm delay time	All models	0	0～999 (max:9.99秒)	(×10msec)	After confirming the operation of the pressure switch, setup delay time to the signal output.
P04	Setup of pressure switch operation pressure	All models	0	0～62.0 (0: No function)	(MPa)	Refer to att.page11 for specifiscations of pressure switch output.
		All models	0	0～899 (0: No function)	(×10PSI)	
P05	Closed setup item		0	Though it is able to be changed, it is not open to the users. Return to the initial value in case changing it by accident.		
P06			0			
P07	Setup of switching start/stop signal	EHU14-L04	1→Notes)	EHU**-L04: No start/stop function	-	Refer to page16 in details. Notes) In case of setting "0", the unit is not operate.
		EHU25-L04				
		EHU25-L07	1	0:input as operate 1:input as stop		
		EHU25-M07				
		EHU30-M07				
P08	Setup of switching pressure unit	All models	0	0:MPa unit 1:PSI unit	-	In case it is used by the PSI unit, change the sticker etc. which indicates the unit so as to identify unit.
P09	Setup of pressure switch operation indication holding	All models	0	0:No hold indication 1:Hold indication	-	Refer to att.page14 in details.
P10	Response gain	EHU14-L04	10	0～999	-	Adjust the control response value. It becomes as sensitive as value is small.
		EHU25-L04				
		EHU25-L07	20			
		EHU25-M07	15			
		EHU30-M07				
P11	Closed setup item		0.15	Though it is able to be changed, it is not open to the users. Return to the initial value in case changing it by accident.		
P12			0.15			
P13	Warning Function Setting(ref.1)	All models	0	0: invalid 1: Open when warning occur 2: Close when warning occur 3: Output by alarm and warning signals		Refer to the attached document. There is no DOUT contact point for EHU14-L04 and EHU25-L04. Please choose [3] when using warning function.

Item No.	Contents	Type	Initial setup value	Adjustable range	Indication unit	Remarks
P14	Delay time of pressure decline warning(ref.2)	All models	0	0～600	(sec)	You can set the delay time from pressure switch activated to warning signal output. No output when P04 setting is [0].
P15	Time for Motor Operation Start	All models	0.5	0.01～9.99	(sec)	You can set the time (sec) from starting the unit (by power on or by start/stop function) to reaching the setting pressure.
P16	Response Gain at Starting Operation	All models	50	1～500	-	You can adjust the response gain when starting the unit (by power on or by start/stop function).
P17	Pressure Sensor Rated Value	All models	10	0～35	-	You can set the rated value of pressure sensor. Usually there is no need to change.
P18	Timing of alarm release (ref.3)	All models	0	0～1	-	You can change the timing of alarm release. Usually there is no need to change.
P19	Pressure to Judge Dry Operation	All models	0.5	0.00～2.00	(MPa)	You can set the pressure to judge dry operation. Invalid when Setting [0].
P20	Time to Judge Dry Operation	All models	0.3	0.01～9.99	(sec)	You can set the time to judge dry operation. Activated when the pressure below P19 keep P20 seconds.
P21	Time to detect revolution speed unstable (ref.4)	All models	0	0～60	(sec)	You can set the time to judge detect " E65: Revolution speed unstable."
P22	Maintenance check function (ref.5)	All models	0	0～1	-	You can activate/inactivate a function to judge whether maintenance is done or not when rebooting, after abnormal shutdown by "E66: Revolutin speed decline at pressure hold."

Ref.1: For details, refer to Warning output setting (P13 setting) on page 14 of the Attachment.
Ref.2: For details, refer to Delay time of pressure decline warning (P14 setting) on page 15 of the Attachment.
Ref.3: The timing of alarm release can be changed as below.

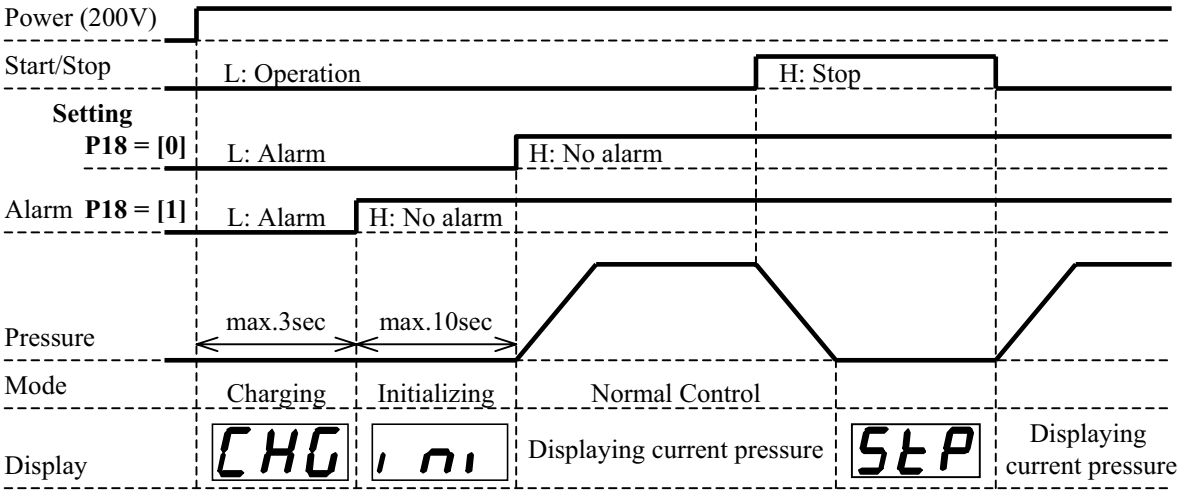

Ref.4: The structure of timing to detect "Revolution speed unstable" is as below.

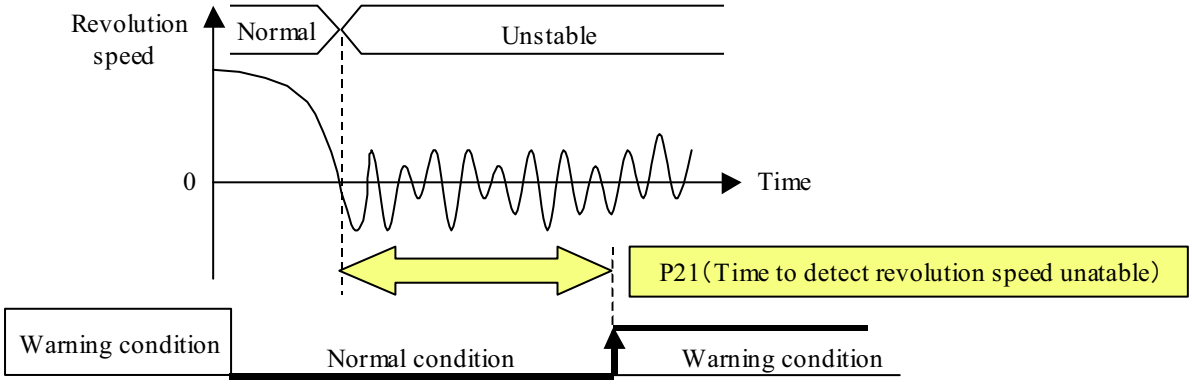

Ref.5: For details, refer to Maintenance check function(P22 setting) on page 16 of the Attachment.

■ Example of operation principles of setup mode. (Adjusting max. flow)
<Ex> Change max. flow 25L/min to 20.5L/min.

Operation	Key operation	3 digit LED	Remarks
Changing setup mode	Push 2 keys simultaneously for more than 2 seconds.	P00	2 seconds later
Choosing item NO.	or	P01	
Setup value indication		25.0	
Changing setup value	or	20.5	
Setup value entry		P01	Light up item NO.
Another setting			
Return to actual pressure indication		3.4	

⚠ Caution
・The change of the setup value is reflected, even if it is not written in. However, it is retuned the setup value before change when it is returned in the actual pressure indication without writing it.

c) Alarm mode

While alarm mode, it is possible to confirm contents on the table below by choosing A00-A09.

Item NO	Contents	Remarks
A00-A09	Indication of alarm contents (Refer to code attached table) and power ON number of times from deliverly.	It becames the latest alarm as small as the number. Indicates alarm code and power ON number of times by turns.

In case there is no alarm record, it indicates “E—” as alarm contents,and “0” as power ON number of times.

Operation example is shown as following.

<Ex.> Confirm contents (E10: momentary over current alarm) of an alarm (A01) before the latest one.

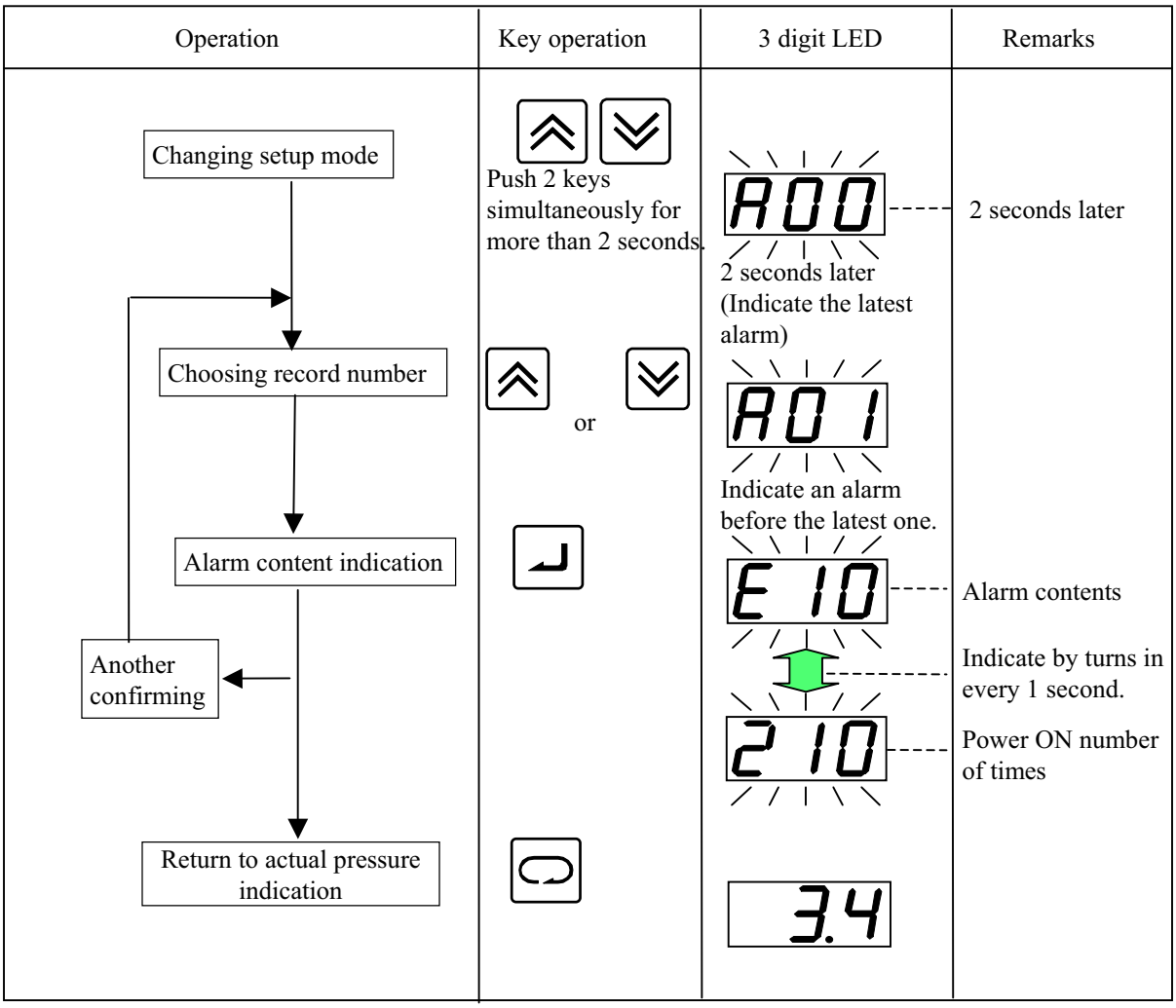

■ The indication list of alarm code.
The Eco Rich equipped with alarm detective function which classified as follows.

◆ Alarm code and abnormal phenomenon

Classification ① Indicating alarm, at the same time, outputting alarm signal, then stopping operation forcibly.

Classification ② Following actions are led by setting of setup mode item P02 (temperature alarm output setup) .

- Setup value 『0』 : Not detect an alarm.
- Setup value 『1』 : Indicating alarm and outputting alarm signal, then stopping operation forcibly 10 minutes later. [Standard model : at shipping condition]

Classification ③ Following actions are led by setting of setup mode item P04 (pressure switch working pressure) . (This alarm is pressure switch function.)

- Setup value 『0』 : Not detect an alarm. [Standard model : at shipping condition]
- Except setup value 『0』 :When the pressure decrease of setup time P14 (Delay time setup of pressure alarm) continue, an alarm signal is outputting. It is canceled if the pressure reverts to the normality. Operation is continued.

Classification ④ It is shown that there was "retrial action" to avoid operation stop in order not to stop the unit forcibly. (Alarm code isn't indicated.)
When it can't be avoided, it is stopped forcibly, and alarm code ① is indicated.

Classification ⑤ It is recorded only as an internal information. Neither the stop of the unit nor the output of alarm signal.

Classification ⑥ Only when the item P04 (setup of pressure switch operation pressure) of the setup mode is effective, and P09 (setup of pressure switch operation indication holding) is "1", alarm code is indicated. However, alarm indication is held.

Classification ⑦ When revolution speed keeps unstable for over 1 minute, it outputs warning display and warning signal. If the output setting is using the alarm contact point, it outputs an alarm signal when the warning keeps 30 minutes. The unit operation continues.

Classification ⑧ When detecting "Revolution speed decline at pressure hold", indicating warning and outputting warning signal. When motor temperature exceeds the threshold in condition of "Revolution speed decline at pressure hold", indicating alarm and outputting alarm signal, and forcibly stopping the operation after continuance of the state for one minute. For details, refer to page 15 of the Attachment.

* Output of the warning signal depends on the setting of Parameter P13 (Warning output setting) in the setup mode. For details, refer to page 14 of the Attachment.

When an alarm is activated during normal operation, a condition of "Panel indication" is displayed. During alarm history check in the alarm mode, a condition of "Internal code" is displayed.

Class.	Panel indication	Internal code	Contents	Remarks	Cause
①	E 8 0	E 1 0	Momentary over current alarm	Unit stop	Make the contact with the dealers.
	E 2 0	E 2 0	DC low voltage		It may be input voltage drops, and the internal wiring breaks. Confirm the wiring condition of power supply and a power supply circumstance.
	E 3 0	E 3 0	Pressure sensor system abnomal		It may be disconnection of pressure sensor and abreakage.
	E 8 0	E 3 1	Encoder system abnomal		It may be unusual pump motor.
	E 6 4	E 6 4	Dry operation error		Reduction of hydraulic oil level error.
②	E 4 0	E 4 0	Motor thermo system abnomal	Unit stops after the setting time progress.	It may be the breakage or short of temperature sensor with in motor.
	E 4 1	E 4 1	Motor temperature abnomal rise		It may be the fan motor stop or clogged of radiator , etc. Comfirm a radiator and fan.
	E 4 2	E 4 2	Fin thermo system abnomal	Unit stops after the setting time progress.	It may be the breakage or short of temperature sensor with fin.
	E 4 3	E 4 3	Fin temperature abnomal rise		It may be the fan motor stop or clogged of radiator , etc. Comfirm a radiator and fan.
③	E 6 2	E 6 2	Pressure drop	Only alarm indication	When pressure decreased for more than 30 seconds continuosly, P04="0" (when pressure switch isn't set up), this alarm isn't outputted.
④	-	E 8 1	Retrial of momentary over current alarm	Retrial occur in order to avoid operation stop.	Make the contact with the dealers.
	-	E 8 2	Retrial of encoder abnomal		
⑤	-	E 1 1	Over current	It is recorded as an internal information.	Make the contact with the dealers.
	-	E 2 1	DC over voltage		
⑥	E 6 3	E 6 3	Pressure switch operation indication	Indicate when a pressure switch operates. It isn't recorded as an internal information	Cause pressure switch operation. (When indication holding function is chosen by setting.)
⑦	E 6 5	E 6 5	Revolution speed unstable	Output after a fexed period. (Advance warning and display according to the setting of P13)	It may be a clogging by contamination or others at throttle valve for minimum revolution speed adjustment. Please readjust the minimum revolution speed.
⑧	E 6 6	E 6 6	Revolution speed decline at Pressure hold	Unit stops 1 minute later after outputting alarm. (Advance warning and display according to the setting of P13)	It may be a clogging by contamination or others at throttle valve for minimum revolution speed adjustment. Please readjust the minimum revolution speed. (Refer to Page17 of the attachement)

* Units with MFG. number starting with "3V" or newer, "E65: Revolution speed unstable" is covered by "E66: Revolution speed decline at pressure hold."

【11. Maintenance】

To maintain motor pump performance for long term and fine, operate periodical maintenance about following item, and if there is problem, perform repair or replacement.
An inspection time, period is shown as a standard on following table, it varies depends on the use condition, environment, and so on.

■Periodic inspection

Object/ item	Inspection time/period	Inspection principles
● Oil tank		
・Confirmation of oil amount	Daily	Confirm float locates between red line and yellow line of oil gauge. Confirm hydraulic oil becoming muddy and bubble getting mixed.
・Confirmation of oil temperature	Daily	Confirm that it is less than 60°.
・Confirmation of oil color	Once/6 months	It is possible to confirm deterioration of oil-hydraulic oil by color. If recognize oil color changing to dark-brown (ASTM level 4：bright-yellow), change hydraulic oil
● Oil cooler		
・Fan motor rotation	Daily	Confirm fan motor rotation. If the fan motor stop rotation, ①The cooling function of oil-cooler declines remarkably. Hydraulic oil or equipment becomes high temperature, and there is fear of the burn. So that quickens deterioration of hydraulic oil, and shortens the life of equipment. ② The motor becomes high temperature (the fan motor cool the motor also), and shortens the life of the motor.
・Core part clogging	Once/6 months	Confirm occurrence of core clogging by visual observation. If the core clogging, the cooling function of oil-cooler declines. Hydraulic oil or equipment becomes high temperature, and there is fear of the burn. So that quickens deterioration of hydraulic oil, and shortens the life of equipment.
● Pressure indication		
・Operation confirmation	Daily	Confirm the indication change as change of loading condition.
・Indicated pressure confirmation	Daily	Confirm pressure indication value of DH as it setup.
● Noise	Daily	Confirm no abnormal noise.
● Electric wiring	Once/ 6 months	① Confirm no crack and damage in covering material of wire. ② Measure insulation resistance, and confirm to ground the earth properly.
● Hose	Once/ a year	Confirm no crack, damage and flaw.

■Cleaning and change

Object/item	Operation time/period	Operation principles
●Oil tank ・oil changing	Once/ a year	Change hydraulic oil periodically. Long time use of this hydraulic unit without changing oil may be harmful for operation and life of the hydraulic equipment.
●Oil cooler ・core cleaning	Once/ a year	Disassemble and clean, as following maintenance principle on page 26-27.
●Oil inlet port with air breather	Once/ a year	Disassemble and clean, as following maintenance principle on page 27.
●Suction strainer	Once/ a year	Disassemble and clean, as following maintenance principle on page 28.

⚠ Danger

・Do not touch rotary point.
・When touching the inside of the controller, observe the process to prevent an electric shock.
i) Turn off the main power source of the hydraulic unit.
(Turn off the power source breaker of the circuit supplying a power.)
Put a bill such as “Operation prohibited (Working)” on the power source breaker, and prevent wrong operation.
ii) ii) After more than 5 minutes pass, remove the cover of the terminal box.
・As for the controller, do not remove except for the cover of the terminal box.
・When starting operation, turn on electricity after installing all of the cover on the controller.

■Oil cooler maintenance principles

⚠ Warning
・ Stop main power source and operation, before starting maintenance. ・ Wear protective glasses and gloves, while operation. ⅰ） Be careful of fin part of core as it is sharp. ⅱ） Be careful not to get foreign substance into eye, while air-blow.

⚠ Caution
・ Be careful not to load strong power on power supply wire or connector of fan motor, while operation. ・ Be careful of oil leakage from piping or oil cooler, while disassembling.

1. Removing the oil cooler
   ①When removing the cover of the terminal box, the connection which the fan harness (refer to below figure) connect to the terminal stand is saw, then take off the connection.
   ②Remove the hose band (2 points).
   ③Unfasten hexagon socket bolt (2 of MxL12), remove the oil cooler from the tank upper board.

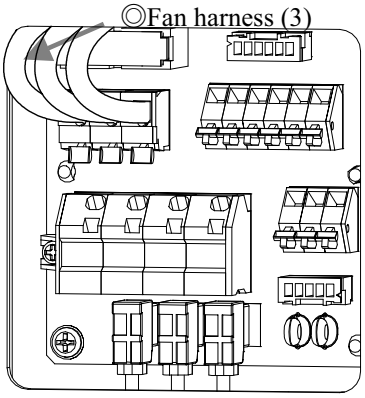

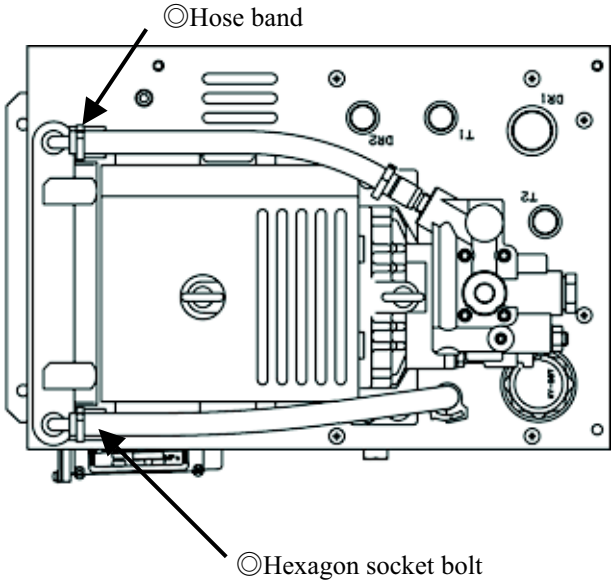

2. Disassembling the oil cooler
   ①Loosen cross recessed hexagon bolt(4 of M5xL12), and divide core and shroud.
   ② Loosen small cross recessed screw (M4xL50), and divide shroud, fan motor and finger-guard.

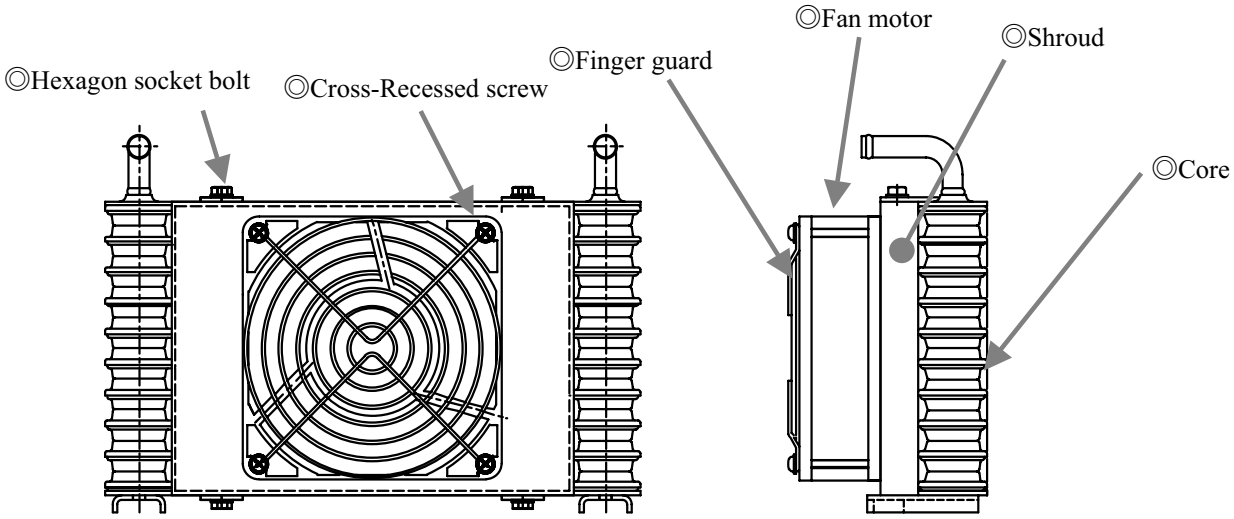

Oil cooler

3. Core cleaning
Blowing core by air or steam, and clean dust or drain stick / pile up on the fin.
Be careful not to get dust or sticking into inside the core, while blowing.

4. Fan motor cleanings
Clean not only fun body or casing parts, but also surroundings of fan and casing crevice with waste cloth.

⚠ Caution
・Do not steam/air blow. Do not steam/air blow, otherwise a foreign substance get in the inside of the motor.

5. Re-assembling
Re-assemble as it was, after cleaning completed.
Confirm operation driven properly, as following test run on page 16, after re-assembling completed.
Be careful to setup inhalation/exhaust direction of oil cooler (page 10).

■Oil inlet port with air breather maintenance principle

1. Removal
It is easy to remove, turn cap to the counterclockwise side by hand.

2. Cleaning
Blow filter by air, and blow sticking/piling up material off.
Remove dust inside the cylinder of strainer.

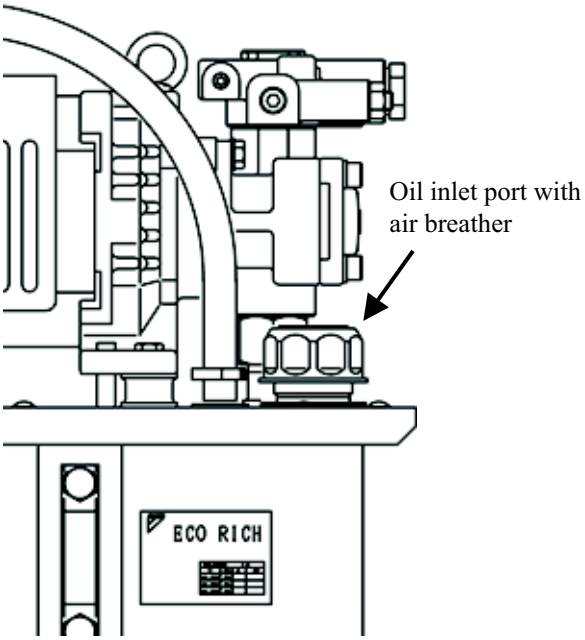

⚠ Warning
・Wear protective glasses, while air blow operation, to prevent to get piled-ups or dust into the eye.

3. Installation direction
Turn a cap to clockwise by hand until it comes to stop, and it is installed.

■Suction strainer maintenance principle

1. Removal

① Remove power source/alarm wire.

② Remove the fan-cover.
(6 points of M5 truss screw)
(As "EHU**-L04" 4 points)

③ Remove the screw that fixes the upper board with the tank.
(8 points of M5 truss screw)

④ Hung up the upper board and the controller to separate from the tank.

⑤ As suction strainer can be seen, loosen and remove suction strainer.

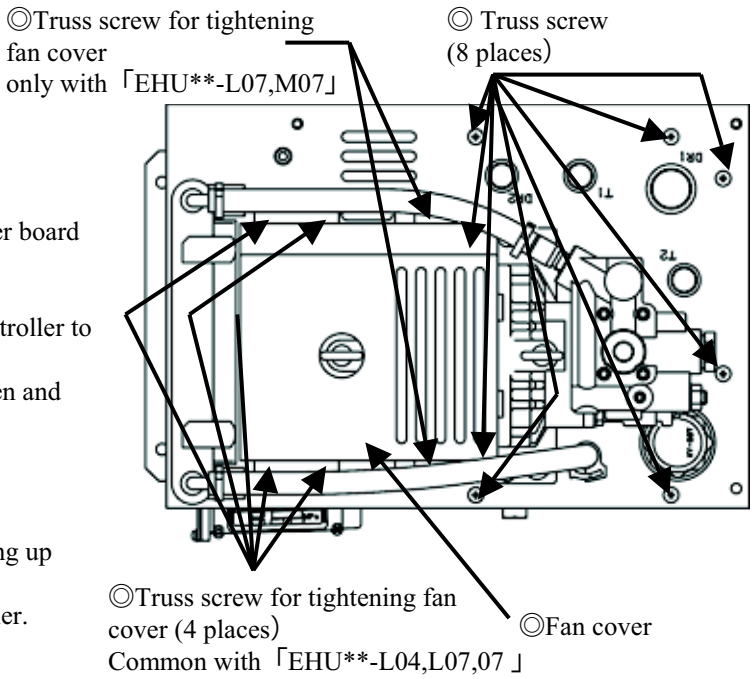

2. Cleaning

Blow filter by air, and blow sticking/piling up material off.
Remove dust inside the cylinder of strainer.

3. Reassembling

After cleaning completed, reassemble as it was.
Do reverse work of the removal.
Confirm operation driven properly, as following trial operation on page 16,after reassembling completed.

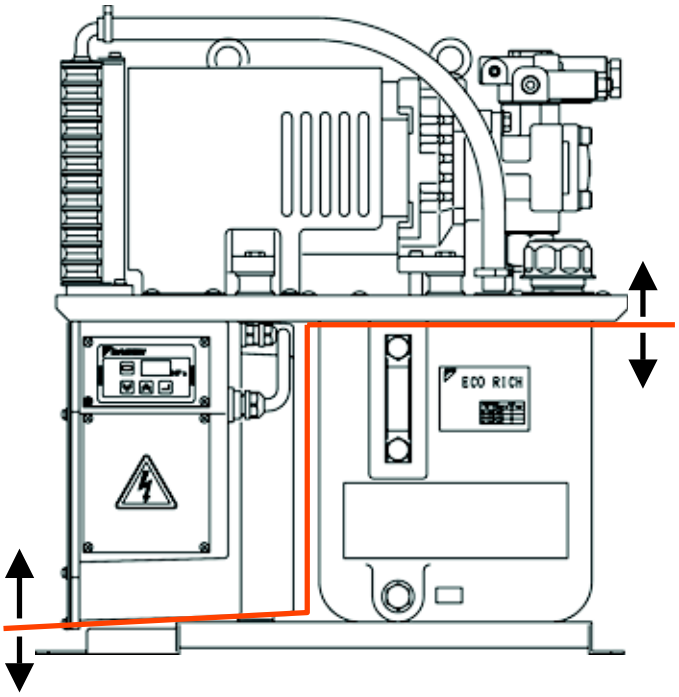

⚠ Warning
・Wear protective glasses, while air blow operation, to prevent to get piled-ups or dust into the eye.

【Change points of the PC setup pressure】

1. The PC pressure change point of the standard valve block (fixed setup pressure relief valve).

When the PC setup pressure of the standard valve block (fixed setup pressure relief valve) is changed, following work is necessary.

① Confirmation of the number of revolutions at pressure hold, before the change of PC setup pressure.
② The change of PC setup pressure.
③ The change of the valve block . (note)
④ The adjustment of flow control valve.

Note) The valve block is different in working pressure.
When you have changed PC setup pressure, refer to spare parts list, or consult with our Sales Division.

⚠ Caution
・Be sure to change the valve block after turning off the power supply surely. ・Be sure to do under the condition that hydraulic oil temperature surely falls down. You may be burned, immediately after the operation. ・When removes some pipes, be careful of leakage of hydraulic oil.

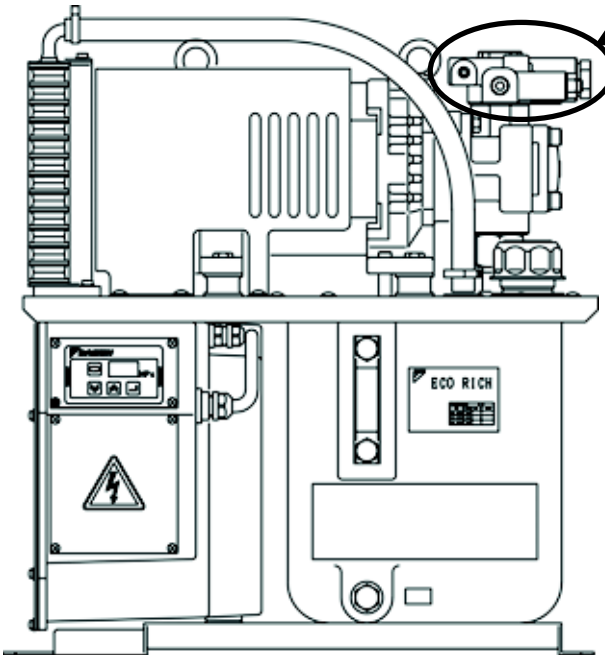

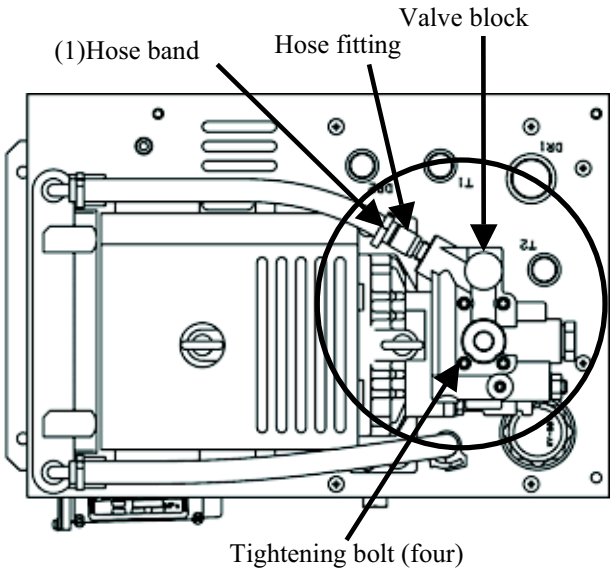

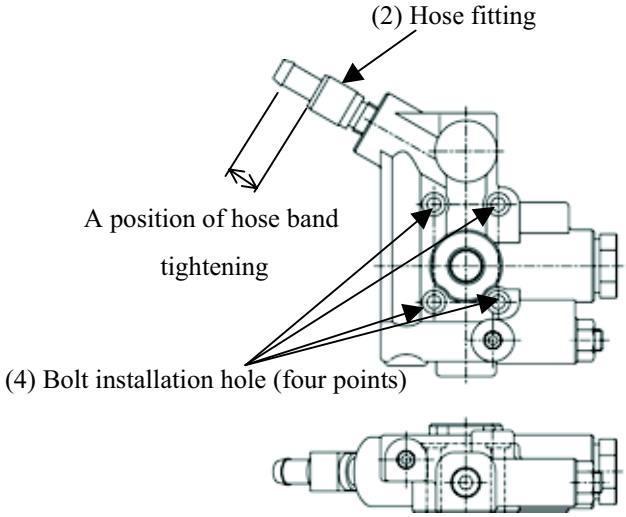

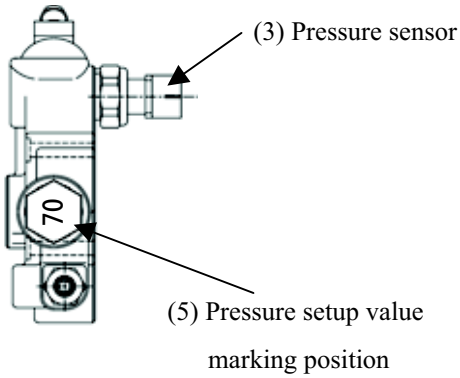

Valve block

1-1) Change points of the valve block

① To remove the valve block.

1） Remove the pipe of the P (discharge) port which is mounted on the valve block.

2） Extract the hose from the radiator to the valve block to take off white hose band from hose fitting (2).

3） when taking off the white hose band (1), be careful that hydraulic oil sometimes spills from the hose and the hose fitting (2) both sides,
(The white hose band (1) can be removed by the special driver and so on.)

4） Cover a small vinyl bag on both ends, in order not to make the body dirty with hydraulic oil from the hose and
hose fitting (2).

5） Take off the harness connector bound with the pressure sensor (3).
(Pull out directly below with pushing the locking arm of the connector. Refer to right figure)

6） Loosen and extract four hexagon socket head cap screws which tightening the valve block, take off the valve block quietly.
(In this time, hydraulic oil leaks out of the block and the pump housing.
Wipe out the oil which leaked out with waste cloth and so on.)

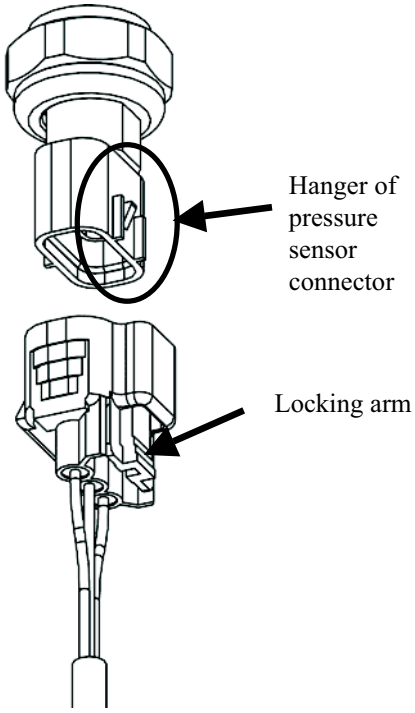

②Mounts a new valve block.

1） Confirm that the indication of the setup value marking point (5) is the pressure of the purpose.
(Example)
When setup pressure is 1.5 MPa, it marks “15”
in case of 7.0 MPa, it marks “70”.

2） Confirm that “O” ring is attached to two holes at the bottom of the valve block.

3） Wipe both contact surface of the pump housing and the valve block, with clean cloth.

4） Be careful not to drop the “O” ring at the bottom of the valve block, and mounting on the pump housing surface to the valve block at position indicated figure, and hole position is put together.

5） Pass four hexagon socket head cap screws through their bolt mounting holes, and fastened by the regular torque.
Tightening torque is 12.6±1.26N•m (129±12.9 kgf •cm)

③ Return each wiring and piping to the original position.

1） Install the pressure sensor harness connector removed above clause ① on the pressure sensor (3).
(In case of installation, insert the locking arm to the hanger of pressure sensor connector, and then, confirm that it is locked securely.)

2） Wipe out hydraulic oil inside the tip of the hose with waste cloth and so on.

3） Pass white hose band (1) through the hose, and connected with the hose fitting (2).
At this time, make sure to insert a hose into the inner part of hose fitting.

4） Tighten white hose band (1) in the fixed position of the hose fitting (2).
(Refer to bottom figure of the former page.)

1-2) The adjustment of the minimum number of revolutions at PC control.

The number of revolutions increases or decreases because of the rise, or the decent of the pressure by the valve block exchange, so adjust to the proper number of revolutions.
Minimum number of revolutions : Number of revolutions at the hold pressure, before change of PC setup pressure.
(But, that is more than 350 min^{-1})

（1） Push “Mode key” , so as the indication mode is changed to “Monitor mode”.

（2） Push “setup key” or at “n00” indication, and “n05” is indicated, then push “ENT key” , so as the indication shows actual number of revolutions.

（3） Loosen the lock nut of the flow control valve for adjustment of minimum number of revolutions.

（4） Adjust the flow control valve with confirming the valve of the actual number of revolutions indication.
(Clockwise : number of revolutions decrease. Counterclockwise : number of revolutions increase)

（5） Tighten the lock nut
（In case of tightening the lock nut, be careful not to rotate adjustment screw of flow control valve.)

（6） Push “Mode key “ , so as the indication mode is changed to “actual pressure indication”

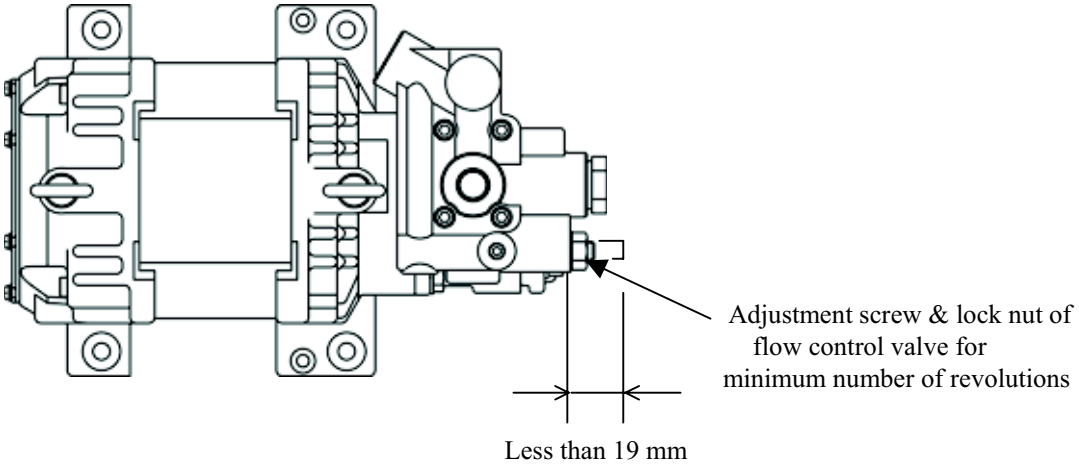

⚠ Caution
・In case of loosening too much adjustment screw of flow control valve for minimum number of revolutions, it comes off the valve block. Be sure to prevent the adjustment screw from coming out beyond 19mm from the surface.

An operation example is shown.

＜Example＞ In case of adjusting the minimum number of revolutions to 350 min^{-1}

Operation process	Key operation	3-digit LED	Remarks
Change to monitor mode		n00	
Change to monitor mode	Or	n05 n05：number of revolutions Monitor mode	
Indication number of revolutions. Rotate adjustment screw of flow control valve to clockwise		60 600min^{-1}：example (Actual number of revolutions)	×10min^{-1}
Set up adjustment screw		35	
Return to actual pressure indication		4.5	

2. The PC pressure change point of the variable relief valve. (Model : EHU**-***-**-30-V)

When the PC setup pressure of the option"V" is changed, the following work is necessary.

① Confirm the number of rotation at pressure hold, before the change of PC setup pressure.
② Change PC setup pressure by the control panel.
③ Adjust the relief valve .
④ Adjustment the number of revolutions by the flow control valve.

⚠ Caution
・In case of using above 6 MPa of PC setup pressure, and becoming unstable with influence such as contamination, install a fixed flow control plug (ϕ 0.8). ・In case of installation a fixed flow control plug, after confirming whether pressure remain.

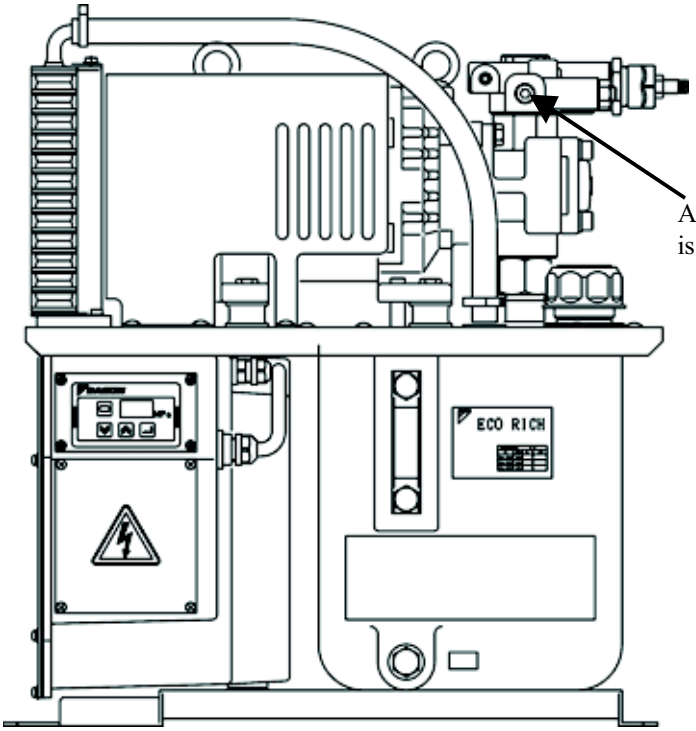

A fixed flow control plug (Rc1/16) is installed the back of plug (Rc1/4) . (Model: PC setup pressure is set above 6 MPa at shipping)

◆ Fixed flow control plug (φ 0.8) installation point

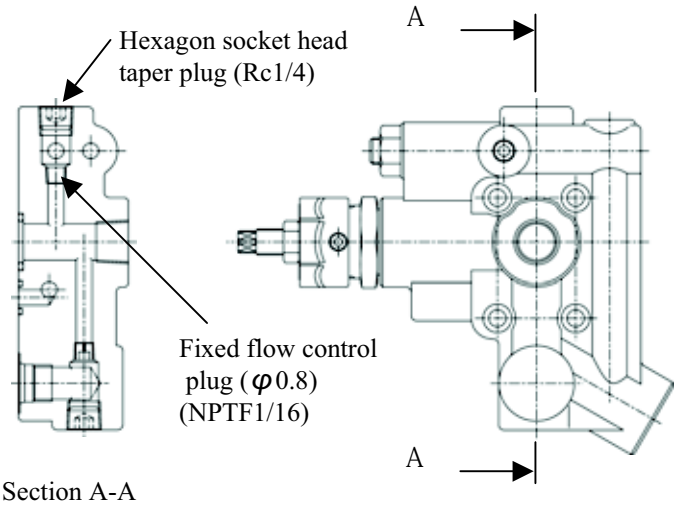

Working process
① Remove the hexagon socket taper plug (Rc1/4)
② Install the fixed flow control plug (NPTF1/16x φ 0.8)
③ Reassemble that a seal tape is wound around the hexagon socket taper plug (Rc1/4)

2-1) Changing process of PC setup pressure

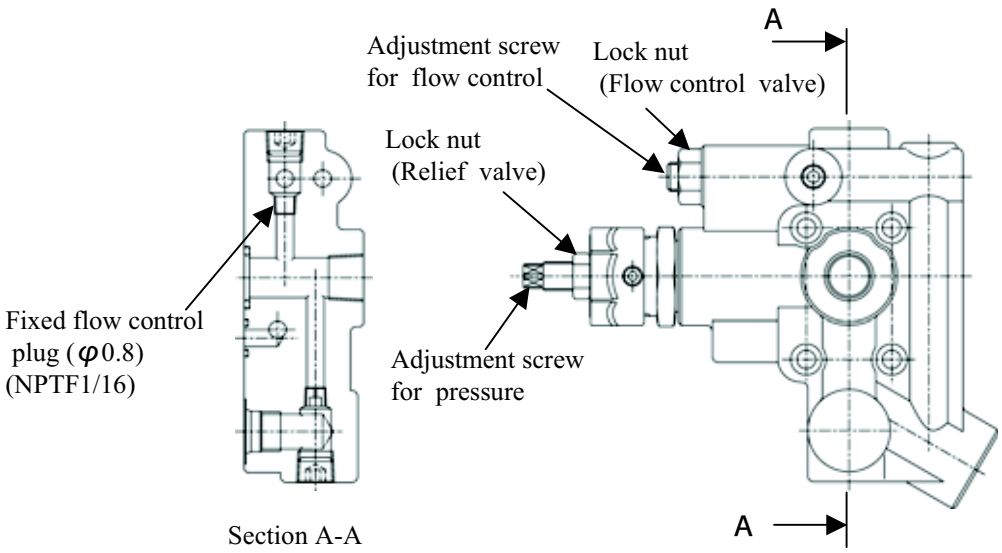

1) Turn on the power supply with blocking pressure line of all pressure circuit.

In order to make the maximum set up pressure of the relief valve, loosen the lock nut of the relief valve, and tighten the pressure adjustment screw fully.

⚠ Danger
・Be sure to tighten the pressure adjustment screw after turned on the power supply. In case of turning on after tightened the pressure adjustment screw, it is dangerous that surge pressure causes.

1) The PC pressure setup value is changed by the control panel.

Pressure adjustment is available within the following range.

Model	P C pressure setup range
EHU14-L04	1.5 ～ 4.0 MPa
EHU25-L04	
EHU25-L07	1.5 ～ 7.0 MPa
EHU25-M07	
EHU30-M07	1.5 ～ 6.0 MPa

Operation example is shown.

＜Example＞ PC pressure setup value is changed from 1.5 Mpa to 4.5MPa.

Operation process	Key operation	3-digit LED	Remarks
Change to monitor mode	Push two keys simultaneously for more than 2 seconds.	P00	2 seconds later
		P00: PC pressure setup mode	
Setup value indication	↵	1.5	
Adjustment of the setup value	⌃ or ⌄	4.5	
Adjustment of the setup value	↵	P00	Light up item No.
Return to actual pressure indication	↻	4.5	

Note) The change of the setup value is reflected, even if it is not written in. However, it is retuned the setup value before change when it is returned in the actual pressure indication without writing it.

3) The adjustment of the minimum number of rotation at PC control.

Since the number of revolutions increases, by rising of setup pressure, adjust to the proper number of revolutions.
Minimum number of rotation : Number of rotation at the hold pressure, before change of PC setup pressure.
(But, that is more than 350 min^{-1})

（1）Push “Mode key” ↻ , so as the indication mode is changed to “Monitor mode”.

（2）Push “setup key” ⌄ or ⌃ at “n00” indication, and “n05” is indicated, then push “ENT key” ↵ , so as the indication shows actual number of rotation.

（3）Loosen the lock nut of the flow control valve for adjustment of minimum number of rotation.

（4）Adjust the flow control valve with confirming the valve of the actual number of rotation indication.
(Clockwise : number of rotation decrease. Counterclockwise : number of rotation increase)

（5）Tighten the lock nut
（In case of tightening the lock nut, be careful not to rotate adjustment screw of flow control valve.)

（6）Push “Mode key “ ↻ , so as the indication mode is changed to “actual pressure indication”

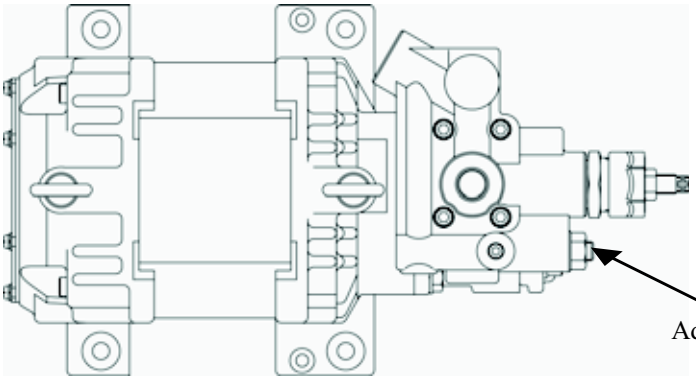

Adjustment screw & lock nut of flow control valve for minimum number of revolutions

⚠ Caution
・In case of loosening too much adjustment screw of flow control valve, it comes off the valve block. ・When PC setup pressure is set less than 6 Mpa, remove the fixed flow control plug, In case of installing the fixed flow control plug, the number of revolutions don't increase.

An operation example is shown.

＜Example＞ In case of adjusting the minimum number of revolutions to 350 min^{-1}

Operation process	Key operation	3-digit LED	Remarks
Change to monitor mode		n00	
Change to monitor mode	Or	n05 n05：number of revolutions Monitor mode	
Indication number of revolutions Rotate adjustment screw of flow control valve to clockwise		b0 600min^{-1}：example (Actual number of revolutions)	×10min^{-1}
Set up adjustment screw		35	
Return to actual pressure indication		4.5	

2-2) The pressure adjustment of relief valve.

Adjust by the adjustment screw with monitoring the actual number of revolutions.

(1) Monitor the actual number of revolutions.

(2) Loosen the lock nut.

(3) Adjust the relief valve by the pressure adjustment screw with monitoring the actual number of revolutions.

(Clockwise: pressure rise, Counterclockwise: pressure decrease.

(4) The actual number of revolutions increases rapidly in the position where the relief valve acts.

Then, turn (tighten) to the position where the number of rotation becomes the minimum number of revolutions.

(5) Tighten and fix the adjustment screw by rotating 3/4. (270° clockwise)

(6) Tighten the lock nut.

By setting up above mentioned,

Setup pressure of relief valve = PC setup pressure + 0.5MPa

Operation example is shown.

＜Example＞ The actual number of revolutions is monitored in the monitor mode.

Operation process	Key operation	3-digit LED	Remarks
Change to monitor mode		n00	
Change to monitor mode	OR	n05 n05：number of revolutions Monitor mode	
Indication number of revolutions		35	×10min^{-1}

<< Reference >>

■Data (PC set pressure - Standard pressure adjusting screw length)

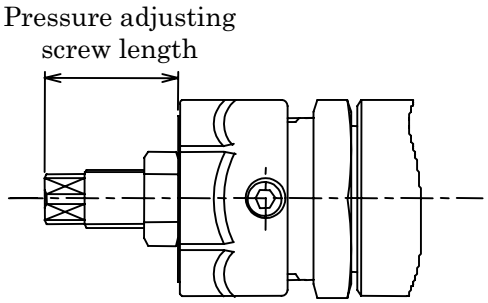

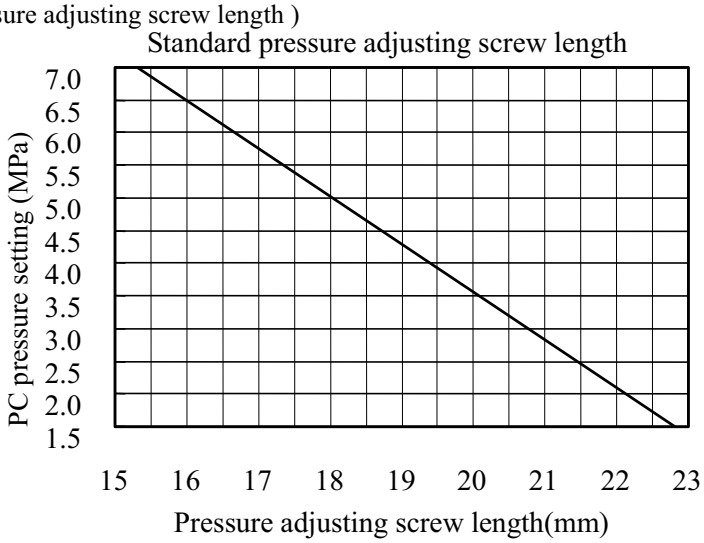

＜Example＞ Adjust to about 5.0MPa by the relief valve with monitoring the actual number of revolutions.

Operation process	Key operation	3-digit LED	Remarks
Indication number of revolutions Begin to turn counterclockwise the adjustment screw		35	×10min^{-1}
↓ Continue to turn counterclockwise the adjustment screw		35	
↓ Relief valve acts.(the number of revolutions increases rapidly. Turn a little clockwise the adjustment screw		50	
↓ Turn 270° clockwise the adjustment screw		35	
↓ Fix the adjustment screw		35	
↓ Return to the actual pressure indication.		4.5	

5) Adjustment is finished.
(PC setup pressure is set up 1.5MPa by the above point at shipping.)

◆ The method of the PC pressure setup. (In case of change again after the setup at shipping is changed once.)

When PC setup pressure is raised: It is the same as the process from “attached document 5 page”.

When PC setup pressure is decreased: When pressure is decreased, the number of rotation falls down.

When the minimum number of rotation is decreased than a proper number of rotation, pressure becomes unstable, so refer to the way of the adjustment “attached document 7 page” the minimum number of rotation, and work in accordance with the process from “attached document 5 page” after the number of revolutions is raised about 600min

⚠ Caution
・In case of adjusting PC setup pressure less than 6MPa, adjust under the condition without the fixed flow control plug.

(Reference) The pressure change of by the pressure adjustment screw of the relief valve is about 0.75MPa for each turn.

【Start power supply, alarm system time chart 】

1-1 Without using pressure switch function

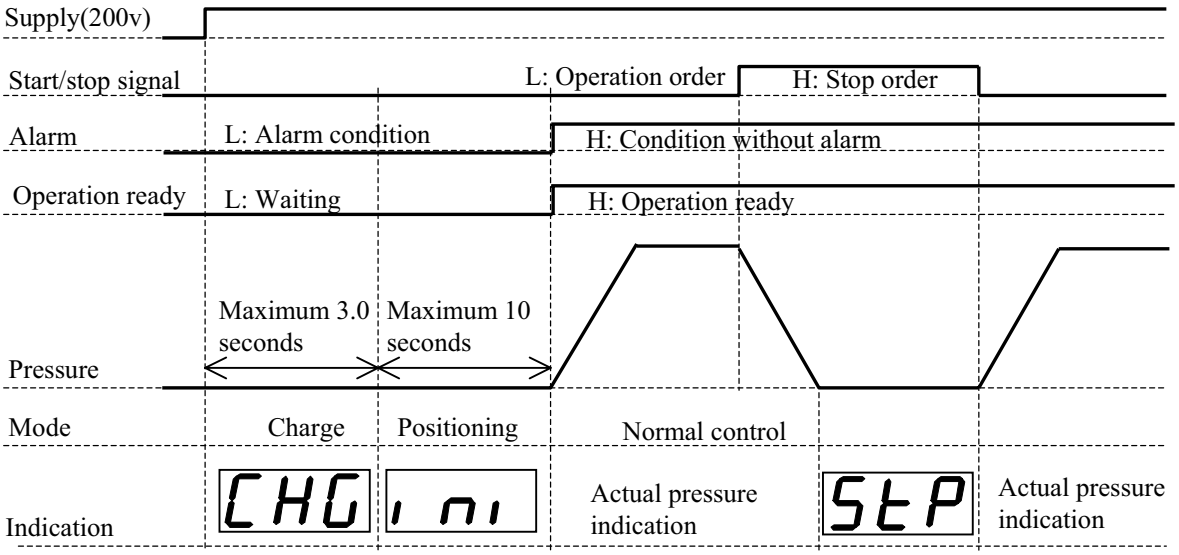

1-2 With using pressure switch function

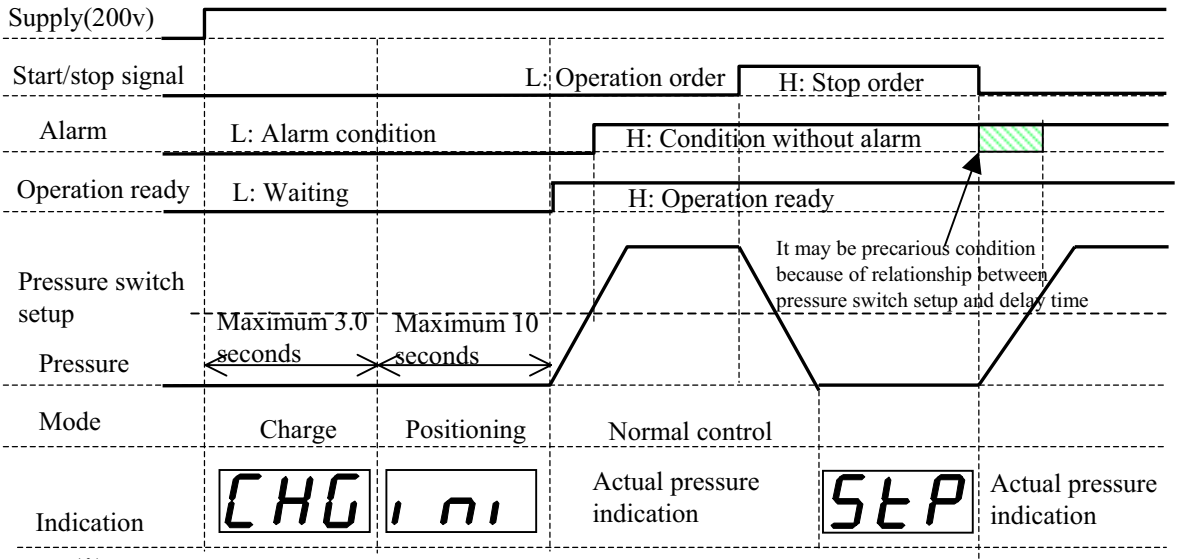

※1.When it starts at start/stop signal ; When the start of the pressure is longer than output delay time of pressure switch, alarm signal is outputted.

1-3 With using pressure switch function (When operation stop after power on)

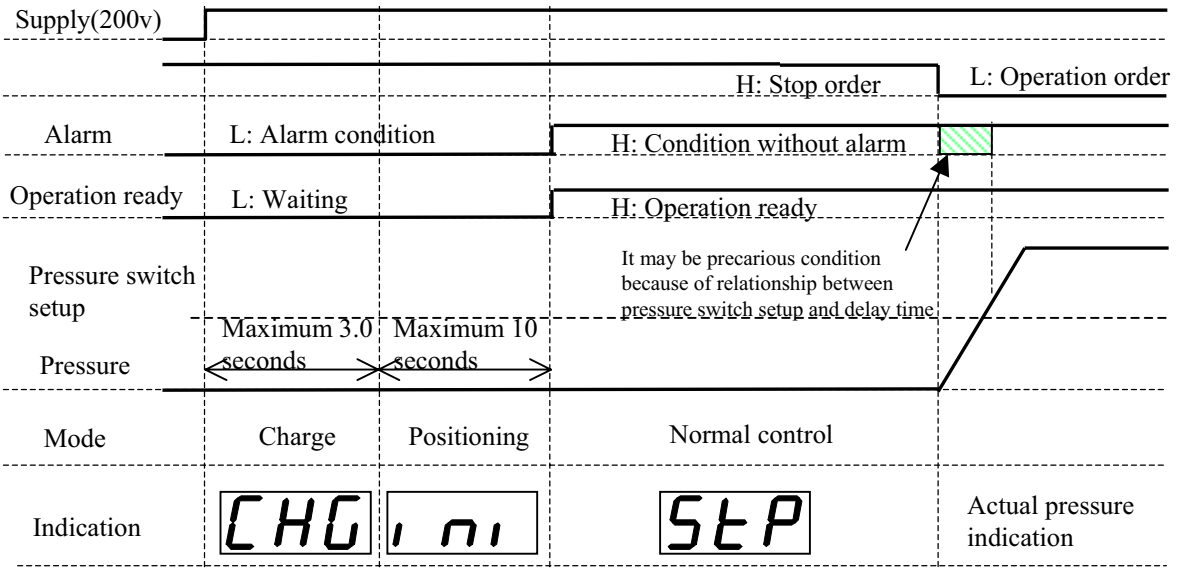

※ When "Operation ready output" is once outputted, output condition is kept until power off.

2. Alarm of pressure decline (Only when a pressure switch function is set up.)

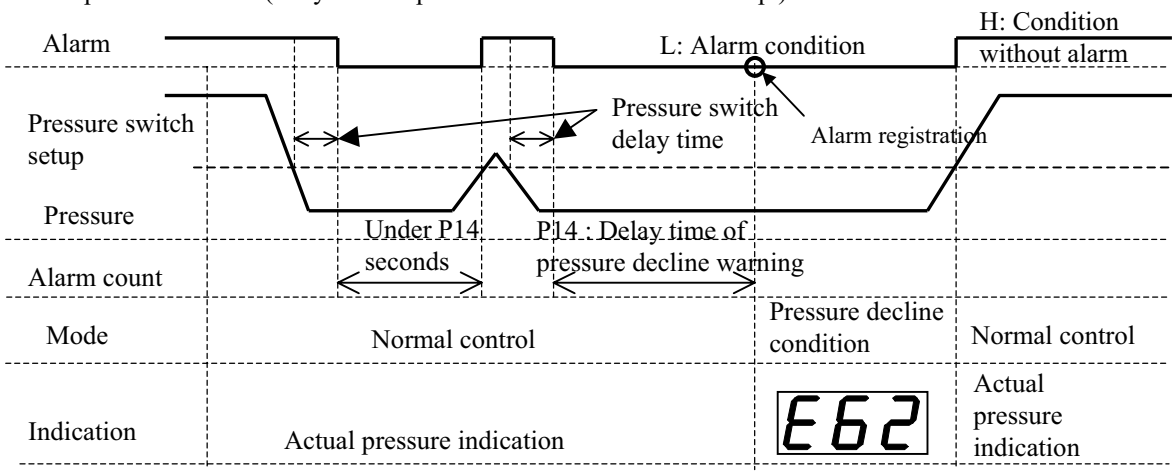

3. Alarm that motor temperature abnormally raises.

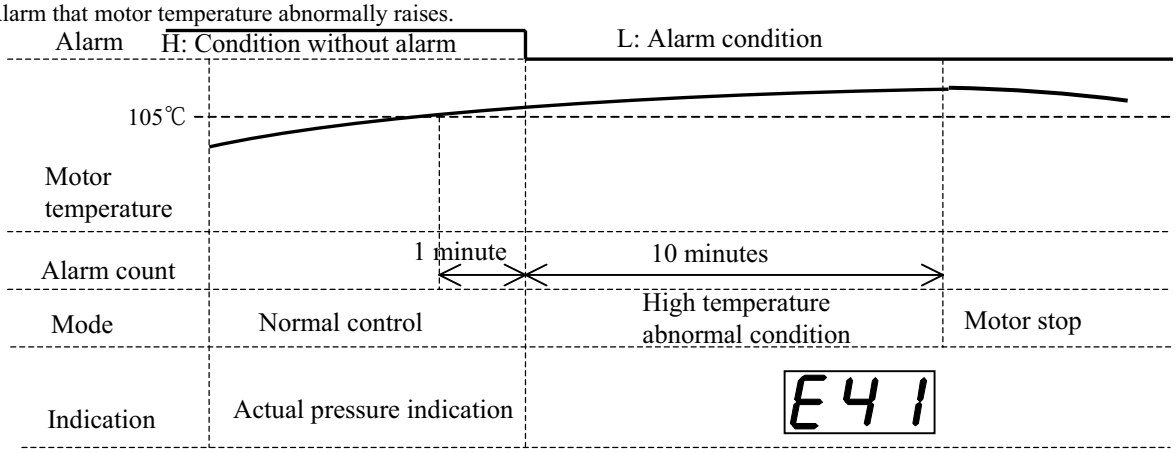

※ If E41 is outputted, it is enable to be canceled except for resetting power supply.
※ Alarm has been outputted soon, in case the temperature is more than 105℃ at starting the power supply.

4.Defective starting alarm

4-1 When a retrial reverts(Pressure decline warning is not used).

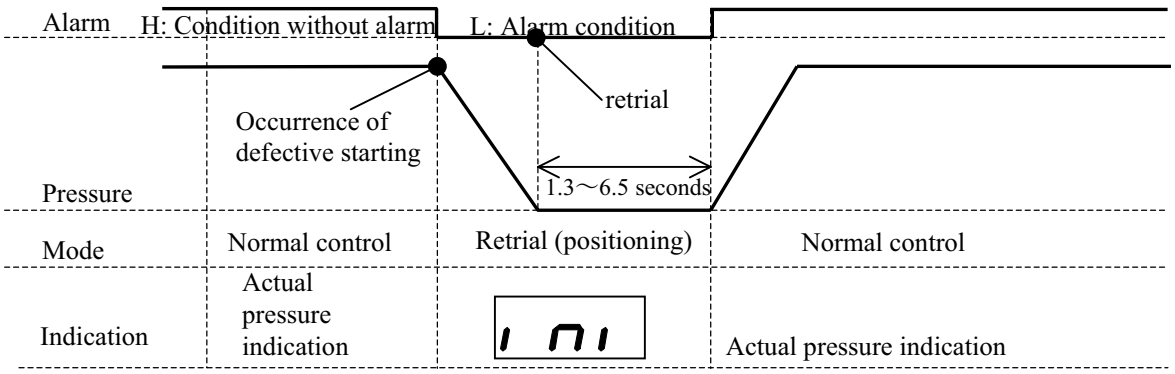

4-2 When a retrial reverts(Pressure decline warning is used).

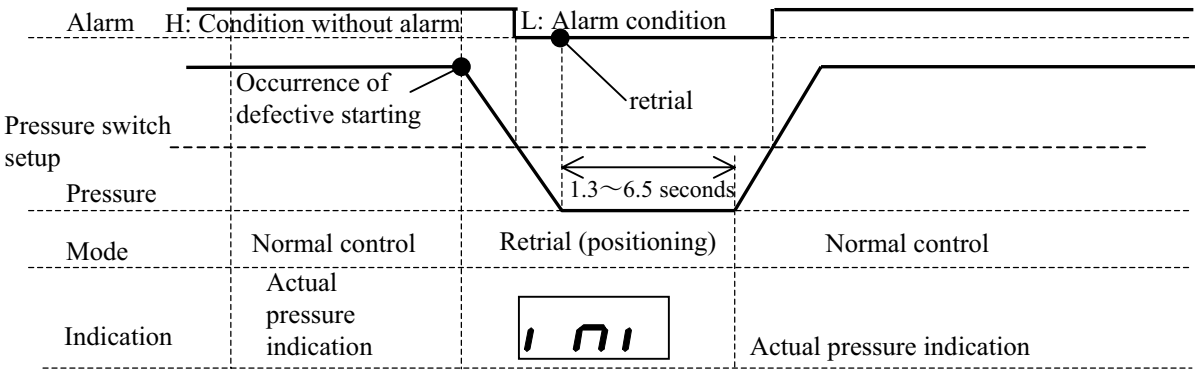

4-3 Retry → Alarm (When the pressure switch function is not used)

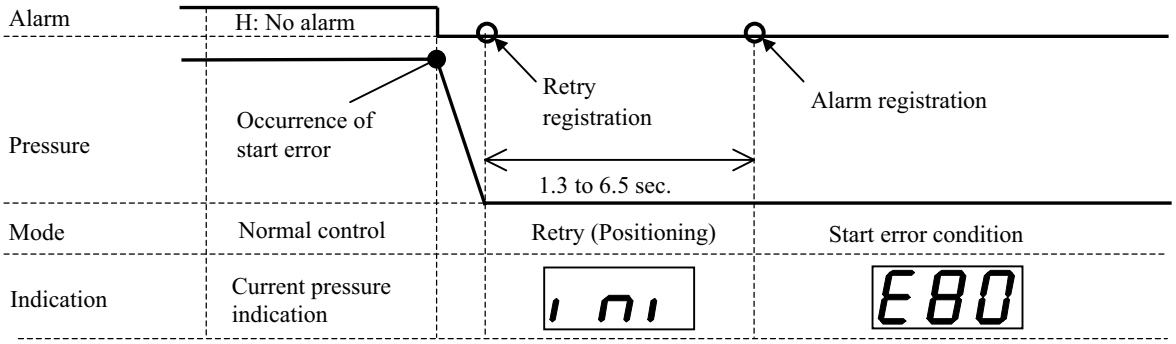

4-4 Retry → Alarm (When the pressure switch function is used)

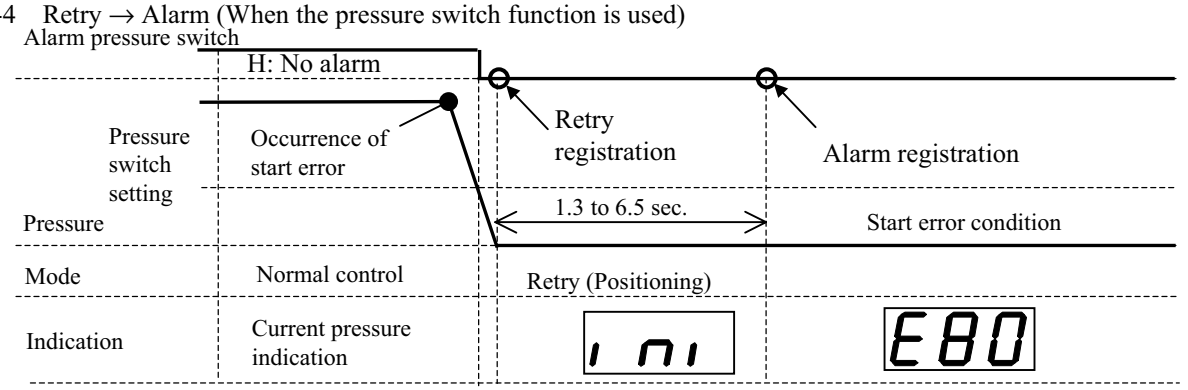

* When "E80" is output, it cannot be reset by any means other than power reset.
* Even if the power supply is turned OFF and then turned ON again, the unit may not normally operate.
(The controller or motor pump may be damaged.)
* "E80" is also indicated by the internal code (E10 or E31) when checked in the alarm mode. You can identify the alarm condition with this code.
* If retry and alarm indications consecutively appear with the same power supply number, occurrence of an error in the middle of operation can be considered.
* If the start error alarm is activated without retry operation, occurrence of an error at the time of power-ON can be considered.

5-1 Command confirmation wait output (When the pressure switch function is not used)

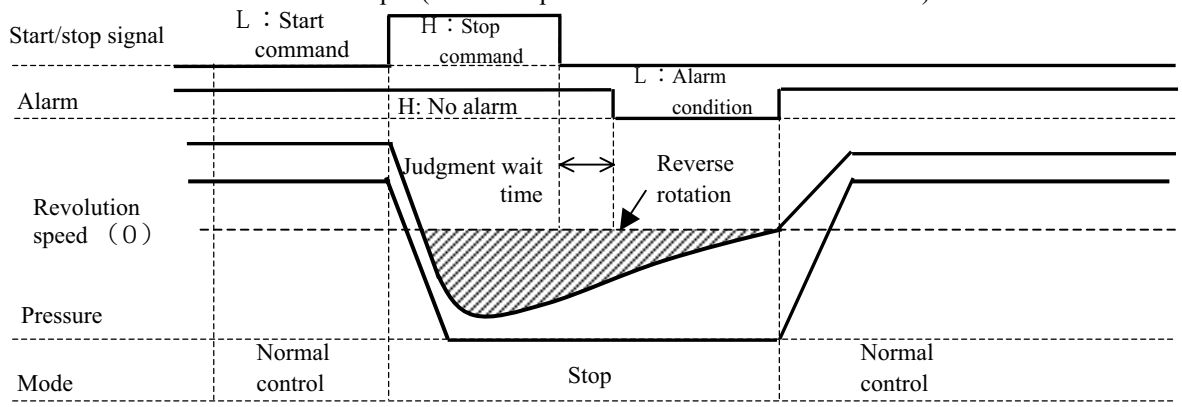

5-2 Command confirmation wait output (When the pressure switch function is used)

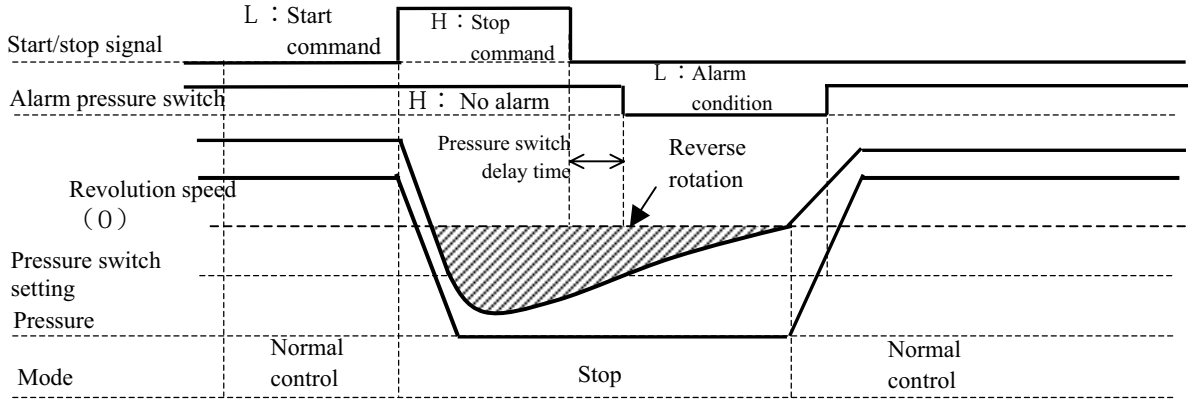

* If a start command is issued immediately after a stop command with the start/stop signal, the unit remains in command confirmation wait status until rotation stops, and outputs alarm during reverse rotation depending on load volume. (When the pressure switch function is used, the pressure switch is activated.)

6.Holding function of pressure switch indication.

1) It works only when choosing pressure switch indication holding with the pressure switch.
2) If the setup of the pressure switch is lower and passes beyond the delay time, pressure alarm is outputted, and then pressure alarm indicates “E63”.
3) Though pressure alarm is canceled, if pressure reverts above the setup of the pressure switch, “E63” is kept to indicate until “ENT KEY” is pushed. (It is also cleared with resetting power supply.)

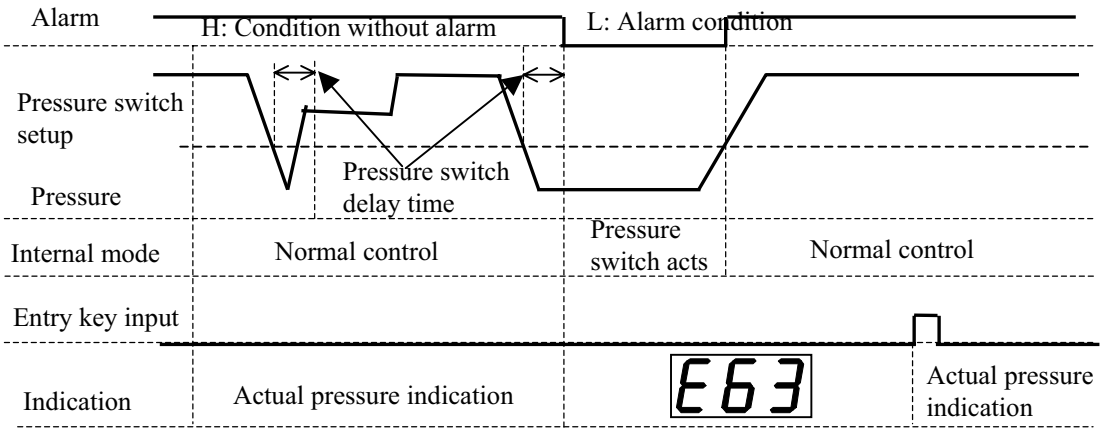

7.Warning output setting (P13 setting)

By setting P13 (warning output setting), the operation will be as written below;
-Setting[0]: No warning detection **[Initial setting]**
-Setting[1]: Output of DOUT by warning signal and operation-ready signal.
-Setting[2]: Output of DOUT as warning signal. No output of operation-ready signal.
-Setting[3]: Output by alarm and warning signals.
Note) There is no DOUT contact point for EHU14-L04 and EHU25-L04. Please choose [3] when using warning function.

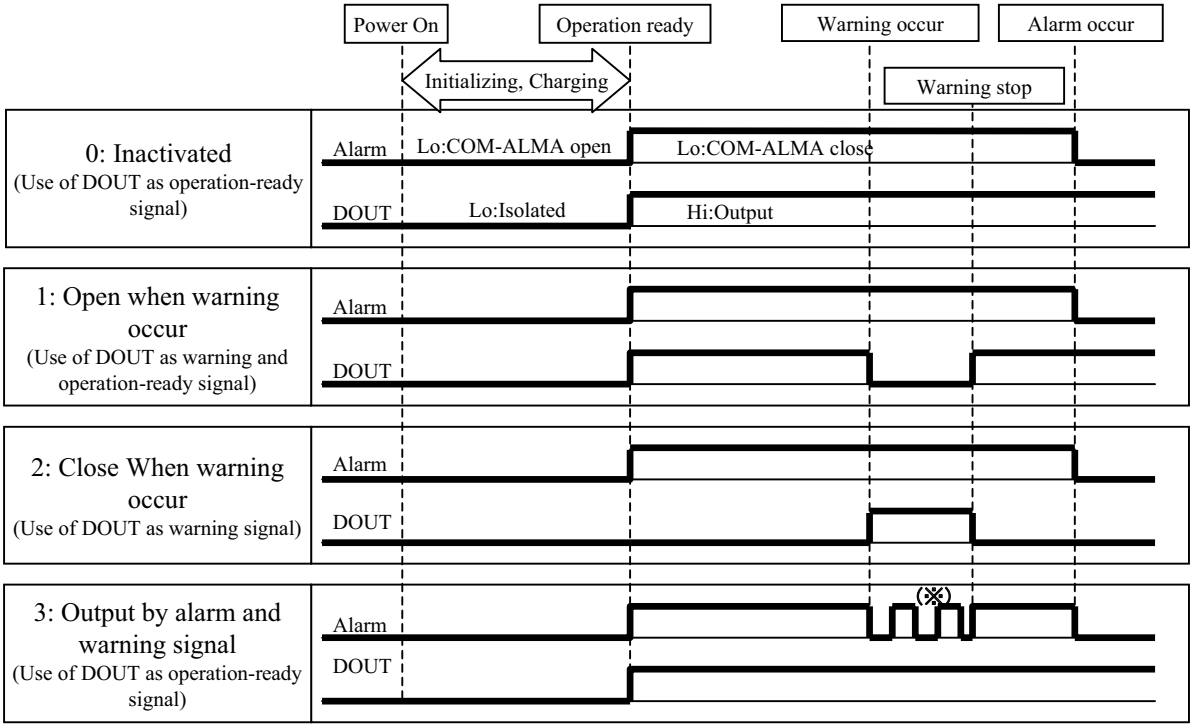

***Repeat On & Off for every 2 seconds, and stabled at Off after 30 minutes.**

Caution
• In case of an alarm occurs, treat it as mentioned in this instruction manual. • Make contact to our Service Division when an alarm isn’t dissolved even if you take measures.

8. Delay time of pressure decline warning (P14 setting)

When the pressure switch setting (P04) is “0”, the pressure switch function and the pressure decline warning function will not work.

When the pressure falls below the pressure switch setting longer than the pressure switch output delay time (P03) and the delay time of pressure decline warning (P14), the pressure switch is activated, and the system judges it as a warning condition.

(If each delay time is set to “0”, both pressure switch and pressure decline warning functions will not work.)

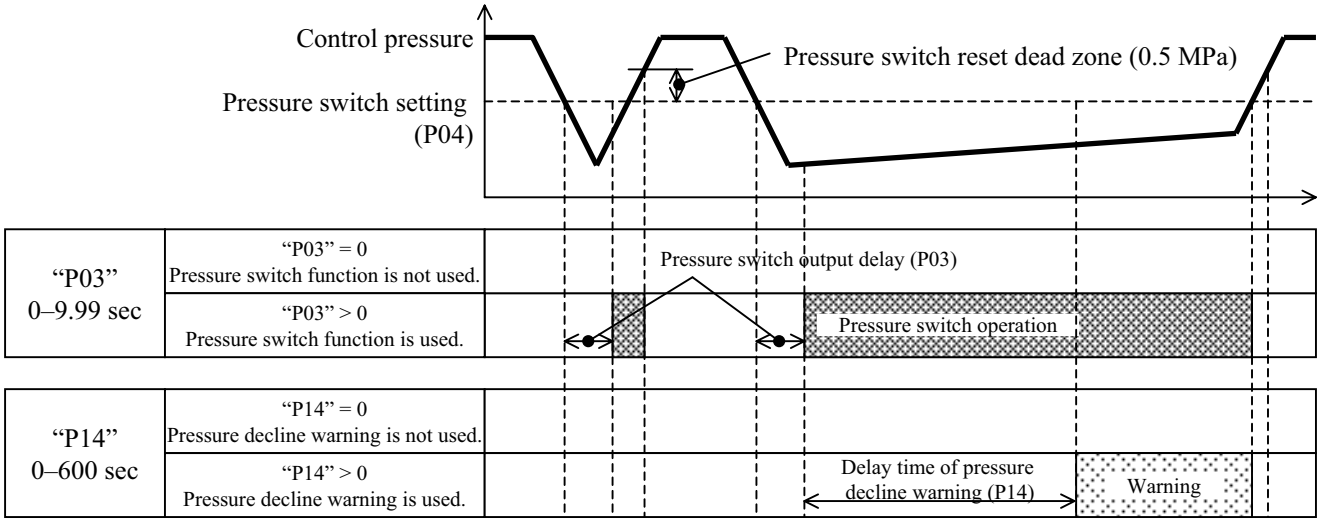

9. Revolution speed decline at Pressure hold(E66 warning)

The bottom value of the minimum revolution speed is set at 300 [min-1]. It prevents instability of revolution speed by keeping the minimum revolution speed, even when number of revolution declines. The holding pressure becomes higher than the set value by setting the minimum revolution speed, and relief valve operates if adhesion of contamination increases. When detecting higher pressure than the set value during pressure control state, outputting “E66: Revolution speed decline at pressure hold.”

By setting P13 (warning output setting), the operation will be as described below;

-Setting[0]: No warning detection **[Initial setting]**
-Setting[1]: Output of DOUT as warning signal and operation-ready signal.
-Setting[2]: Output of DOUT as warning signal. No output of operation-ready signal.
-Setting[3]: Output of alarm and warning signals.
Note) There is no DOUT contact point for EHU14-L04 and EHU25-L04. Select [3] when using warning function.

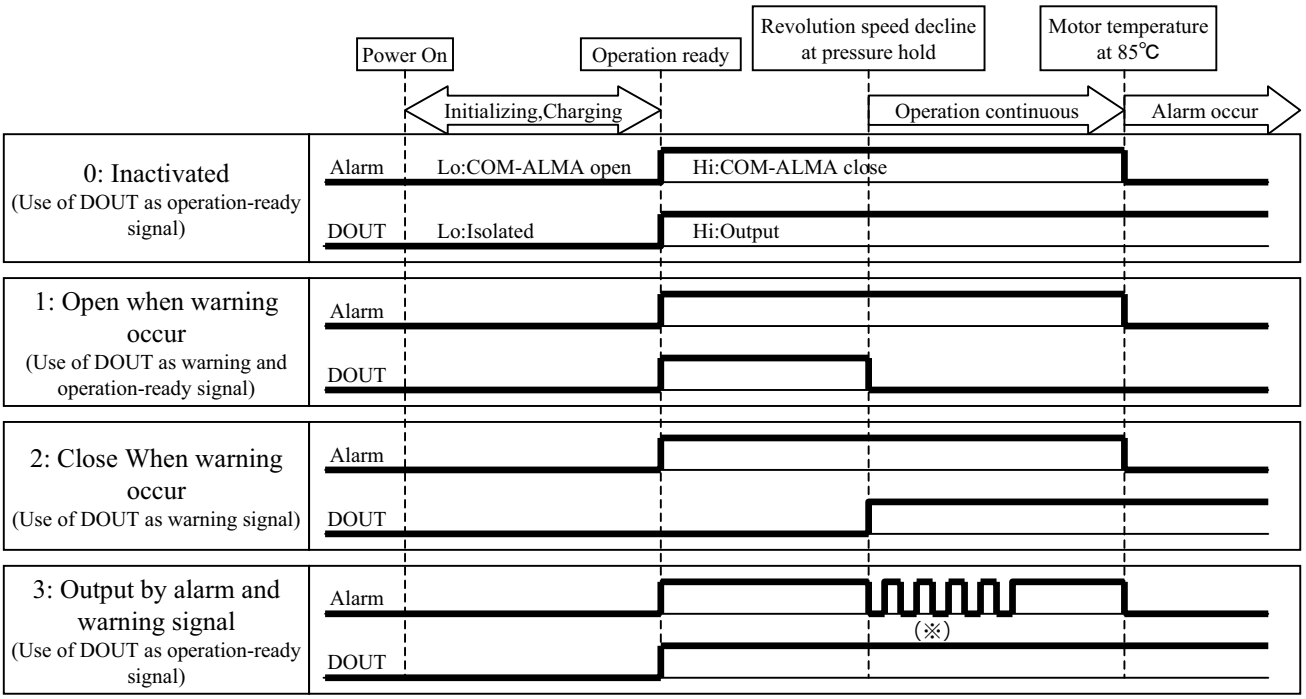

※Repeat On & Off for every 2 seconds, and stabled at Hi after 10 minutes.

10.Maintenance check function(P22 setting)

After abnormal shutdown by “E66: Revolution speed decline at pressure hold”, the unit automatically judges whether maintenance is done or not when rebooting, and does not start its operation in case judged as “maintenance has not been done.”
The period for the judgment is 30 seconds after starting motor control while rebooting. If the unit detects a condition of “Revolution speed decline at pressure hold” during the 30 seconds of maintenance check, then immediately stops its operation by “E66.”
In addition, the unit voluntarily prompts the users to do maintenance by opening/closing relay outputs for ten minutes after abnormal shutdown by “E66”, despite the setting of “P13: Warning output setting.”

◆ When motor temperature exceeds the threshold in condition of revolution speed decline at pressure hold (abnormal shutdown by “E66”)

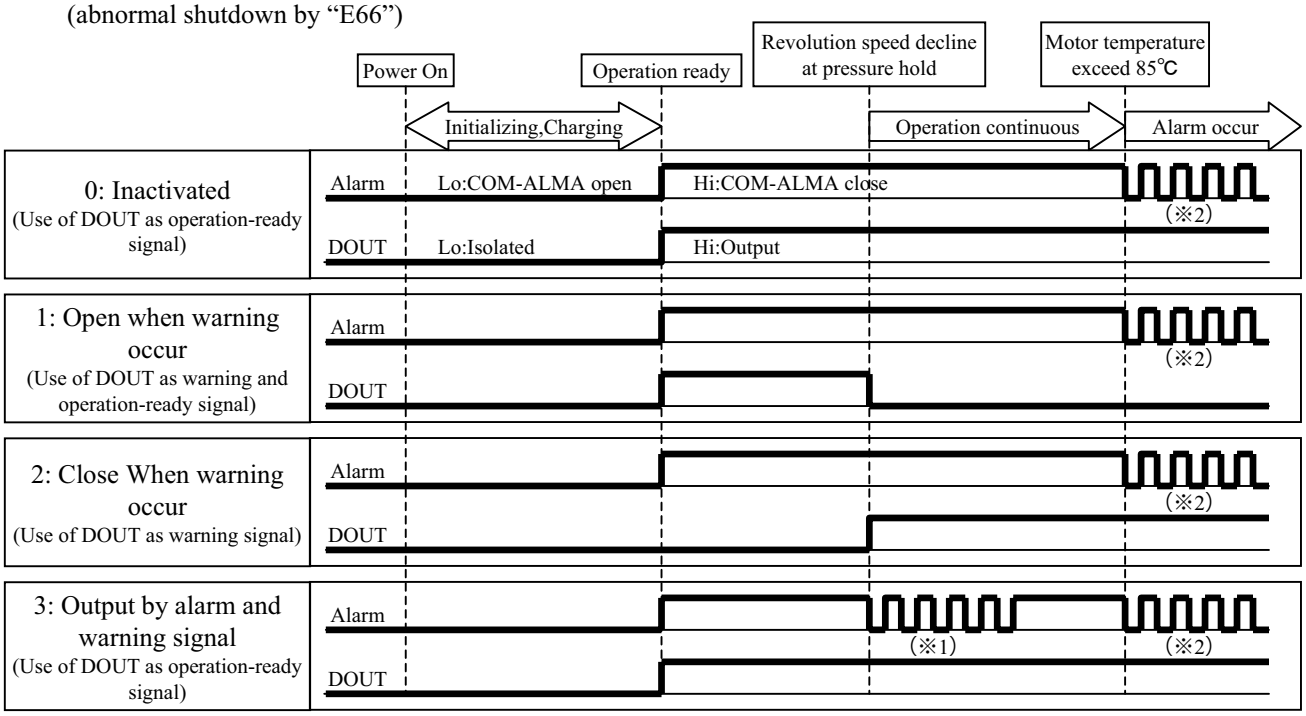

（※1） Repeat Open & Close for every 2 seconds, and stabled at Hi after 10 minutes.
（※2） In case “P22: Maintenance check function” is set at “1”, the relay repeats open/close in every two seconds and stays open after ten minutes, despite the setting of “P13: Warning output setting.”

◆When the unit detects a condition of “Revolution speed decline at pressure hold” during maintenance check

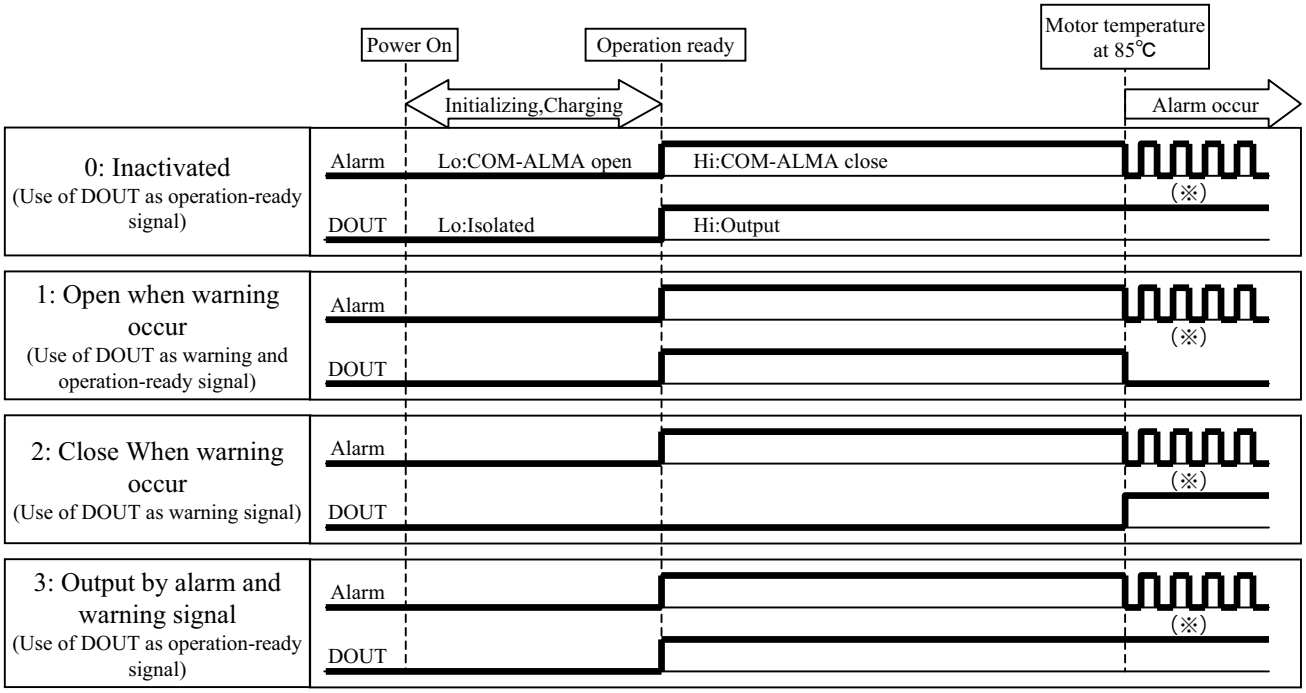

（※） In case “P22: Maintenance check function” is set at “1”, the relay repeats open/close in every two seconds and stays open after ten minutes, despite the setting of “P13: Warning output setting.”

[Procedure for minimum revolution speed adjustment during pressure unstable error]

If the pressure becomes unstable, adjust the minimum revolution speed according to the procedure below.

[1] After turning ON the power supply, change the display mode to "Monitor Mode".
[2] When "n05" appears, press the "ENT" key to select the actual revolution speed display mode.
[3] Loosen the lock nut (width across flats: 17 mm) of the minimum revolution speed adjustment throttle valve.
[4] Turn the adjustment screw counterclockwise by 180°, and leave it for approx. 10 seconds.
Note) If the adjustment screw is extremely loose, it will come off.
[5] Turn the adjustment screw clockwise by 180°, to return it to the original position.
[6] Make sure that the actual revolution speed indicated on the panel is 350 (min^{-1}) or more.
If indication of revolution speed is less than 350 (min^{-1}), turn the adjustment screw counterclockwise to increase revolution speed to 350 (min^{-1}) or more.
[7] Tighten the lock nut.
(For easy adjustment, it is recommended that you tighten the lock nut by hand first, and use a tool to finally lock it.)
[8] Return to the actual pressure display mode.
[9] This completes the adjustment procedure.

Selection method	Key operation	3-digit LED	Remarks
Change to Monitor Mode		n00	
Select an item number		n05	
		n05: Revolutions / minute	
Indication of actual revolution speed		23	×10 min^{-1}
Turn adjustment screw counterclockwise by 180°		85	
Turn adjustment screw clockwise by 180° (to original position)		43	
Return to actual pressure display mode		4.0	

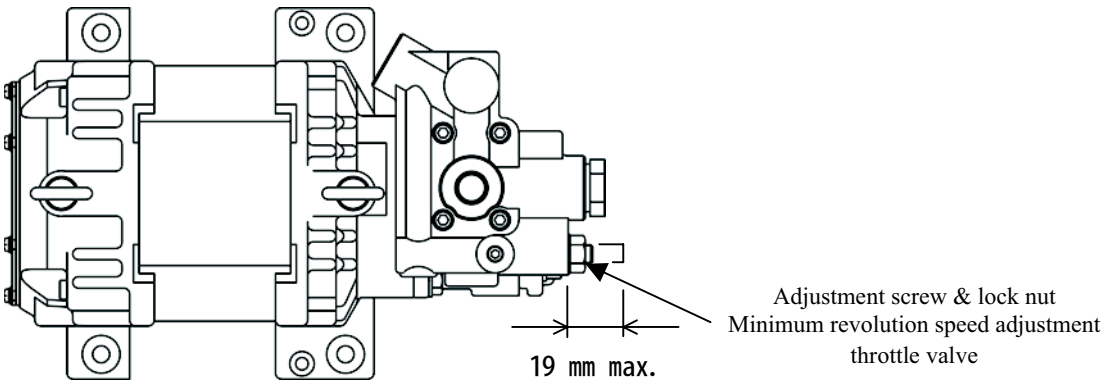

⚠ CAUTION

If the adjustment screw of the minimum revolution speed adjustment throttle valve is excessively loose, it will come off, causing oil to spout from the valve.
The adjustment screw must not protrude by 19 mm or more from the screw mounting surface.

【MFG No. function table】

Model	Initial sign of MFG No.							
EHU14 -L04	～36	37～3E	3F～	3G～3M	3N	3Q～3R	3S	3V
EHU25 -L04	～36	37～3E	3F～	3G～3M	3N	3Q～3R	3S	3V
EHU25 -L07	～39	3A～3F	3G～	3H～3M	3N	3Q～3R	3S	3V
EHU25 -M07	～39	3A～3F	3G～	3H～3M	3N	3Q～3R	3S	3V
EHU30 -M07	～39	3A～3F	3G～	3H～3M	3N	3Q～3R	3S	3V
Additions and changes		○Addition of indication hold function	○Addition of response gain setup function ○Addition of operation ready output function ○Addition of identification function at control stop	○Addition of alarm output during retry ○Addition of command confirmation wait function	○Addition of warning output function ○Addition of alarm dry operation ○Addition of motor temperature error Alarm criteria changing function	**< Monitor >** ○Motor thermo **< Parameters >** ○Motor start time ○Start initial response gain ○Pressure sensor rating setup ○Alarm reset timing ○Dry operation error judgment pressure ○Dry operation error judgment time	○ Addition of parameter: Time to detect revolution speed unstable	○Addition of alarm: Revolution speed decline at pressure hold ○Addition of parameter: Maintenance check function ○Elimination of alarm: Revolution speed unstable
Parameter	P00～P08	P00～P09	P00～P12	P00～P12	P00～P14	P00～P20	P00～P21	P00～P22